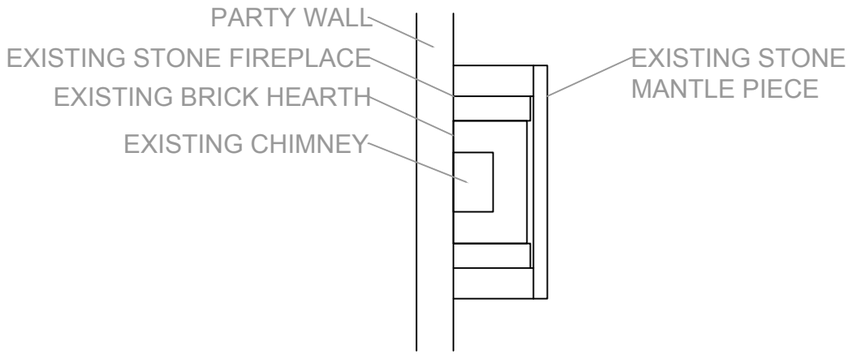

EXISTING FIREPLACE
INTERIOR PLAN VIEW SECTION

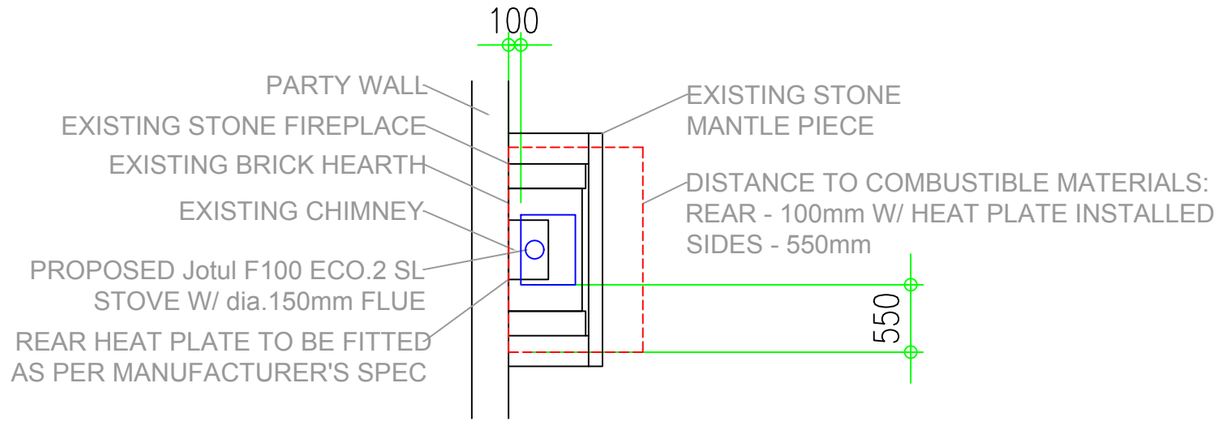

PROPOSED FIREPLACE
INTERIOR PLAN VIEW SECTION

EXISTING FIREPLACE



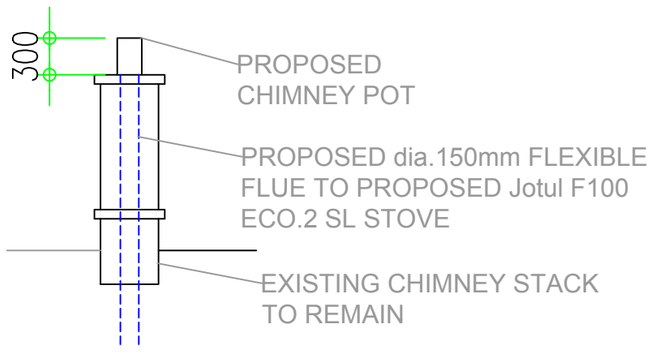

PROPOSED CHIMNEY POT
EXTERIOR VIEW

PROPOSED WOOD BURNER





PROPOSED 300mm
CHIMNEY POT

D.Morris Design.

t: +44(0)7552 777057
e: info@dmorrisdesign.com
www.dmorrisdesign.com

Kemp House
160 City Road
London
EC1V 2NX

Retail Design | Residential Design
Commercial Design | CAD Drafting

BUILDING LEGEND

1:50

1m 0 1m 2m 3m 4m 5m

NOTES

N.B. WOOD BURNING STOVE TO BE INSTALLED BY HETAS REGISTERED COMPANY AND ALL ORIGINAL PROPERTY FEATURES TO BE RETAINED

ALL DIMENSIONS IN MM. MEASUREMENTS MUST BE CHECKED ON SITE PRIOR TO COMMENCING WORKS AND ANY DISCREPANCIES BROUGHT TO THE ATTENTION OF THE DESIGNER. DO NOT SCALE OFF THE DRAWING. ALL DRAWINGS ARE SUBJECT TO COPYRIGHT AND SHOULD NOT BE ALTERED OR REPRODUCED WITHOUT PRIOR CONSENT FROM D.MORRIS DESIGN LTD.

PROJECT TITLE: YEW TREE COTTAGE

DRAWING NAME: PROPOSED CHIMNEY DETAILS

CLIENT: MR. P. CAIRNS

Scale: 1:50

Page Size	Job #	Drawn by	Approved	INFORMATION
A3	1201	AS	DM	PLANNING

Drawing Number	Rev	Date
300	01	05/09/23