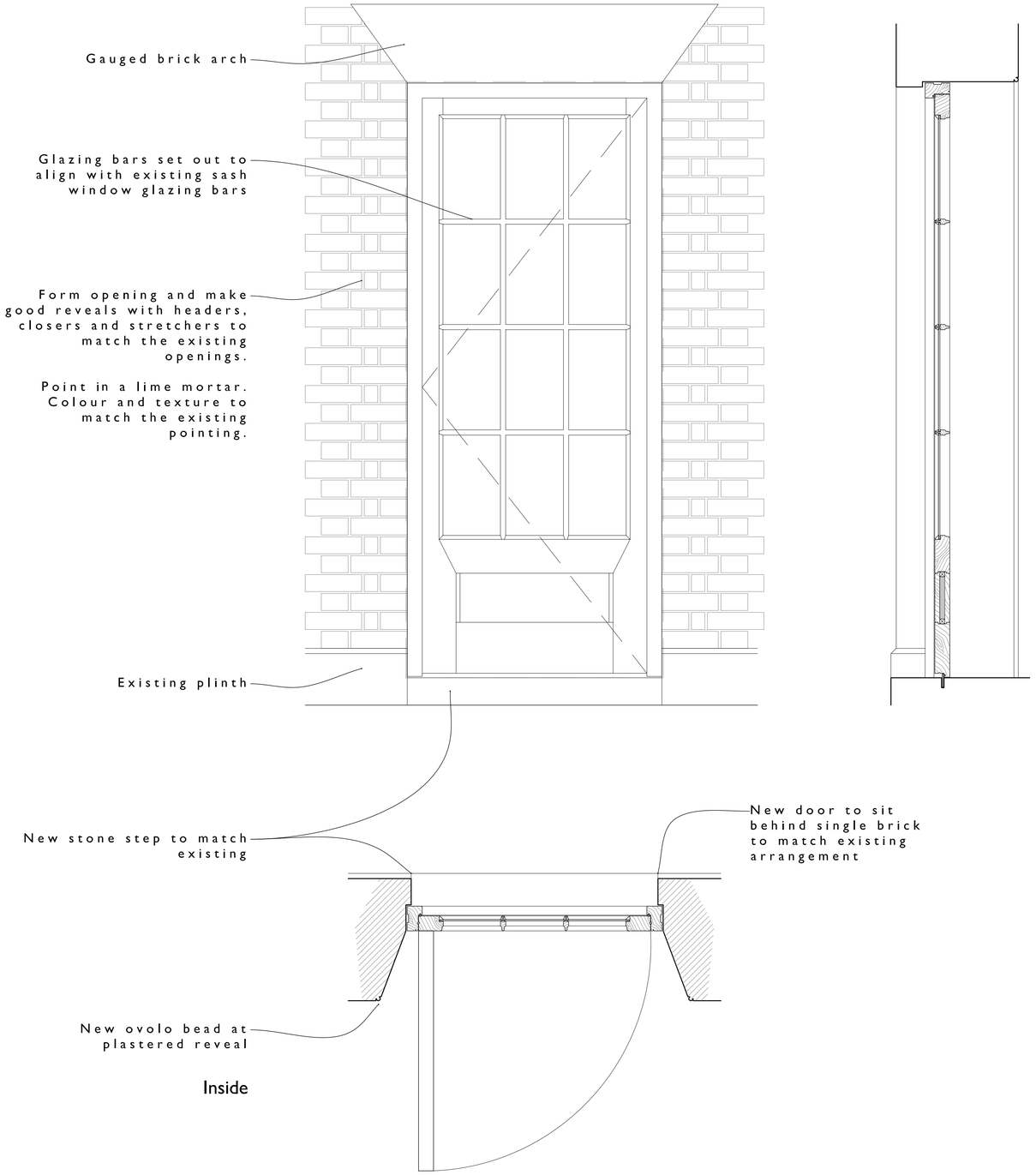

Plan, Elevation and Section

Head & High-level Jamb

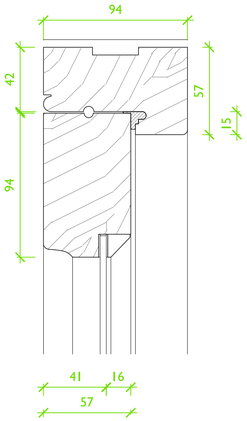

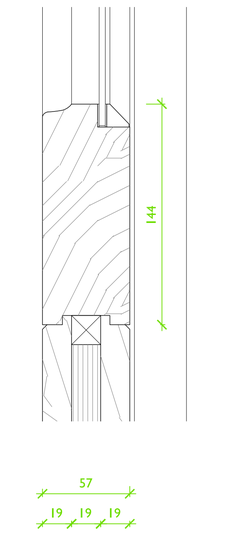

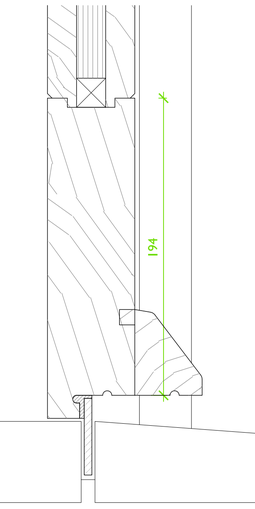

Internal Finish

Sill

Details 1:2

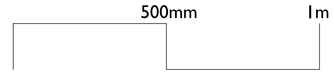

SCALE 1:10 @ A1

Glazing Bar

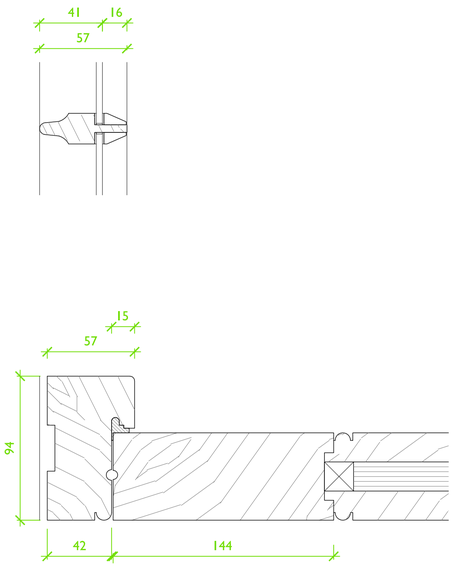

Low-level Jamb

Beaded Panel

NOTES

1. All windows hardwood - single glazed
2. All dimensions to be checked on site prior to fabrication
3. Glazing bars in hardwood fully housed with putty to seal
4. SGU 4-6mm units
5. Seals generally Sealmaster Deluge SEM/000
6. Windows supplied to site primed & undercoated ready for finishing Dulux Weathershield system. Colour to match existing.
7. Windows supplied with hinges, espagnolettes, latches and locks ready

Rev.	DR.	CH.	Date	Notes
-	CSJ	GH	24.08.23	First Issue

PROJECT: Old Rectory Manningford Abbot

DRAWING: Proposed D0.1 Details

DRAWING No.: 4285_21_P

SCALE: 1:10 @ A1, 1:20 @ A3

DATE: AUG 2023

llewellyn harker lowe

home barn, gattrell, stoway lane, northend, bath, BA1 8EH
email architects@llewellynharker.com
Tel 01749 860022

© llewellyn harker architects 2022
Do not scale from this drawing use figured dimensions only