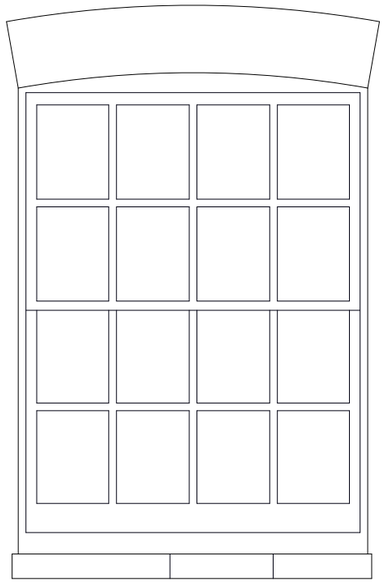

Original Elevation
1:20@A3

8 over 8 Timber, box framed, lead weighted sash, single glazed with putty beading, internal shutters. Brick arched header.
Condition: In need of redecoration externally. Rotten wood not investigated so as not to further weaken painted surface. Stone cill is in 3 sections.

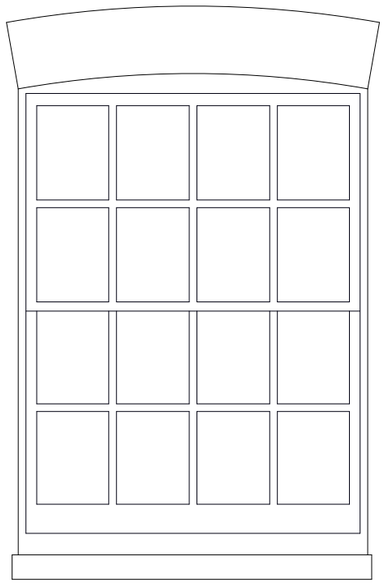

Proposed Elevation
1:20@A3

As existing, redecorate (white), add draft seals, check sash cords and weights.
Any rotten wood to be repaired with timber repairs like for like, small repairs to be repaired with repair care system to avoid large loss of timber sections.
Replace existing 2 piece stone cill with new continuous section, to match in form and stone type.

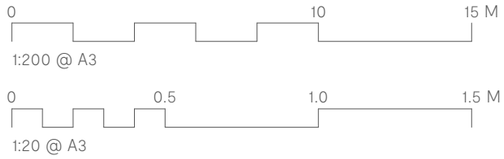

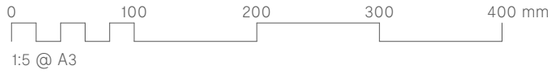

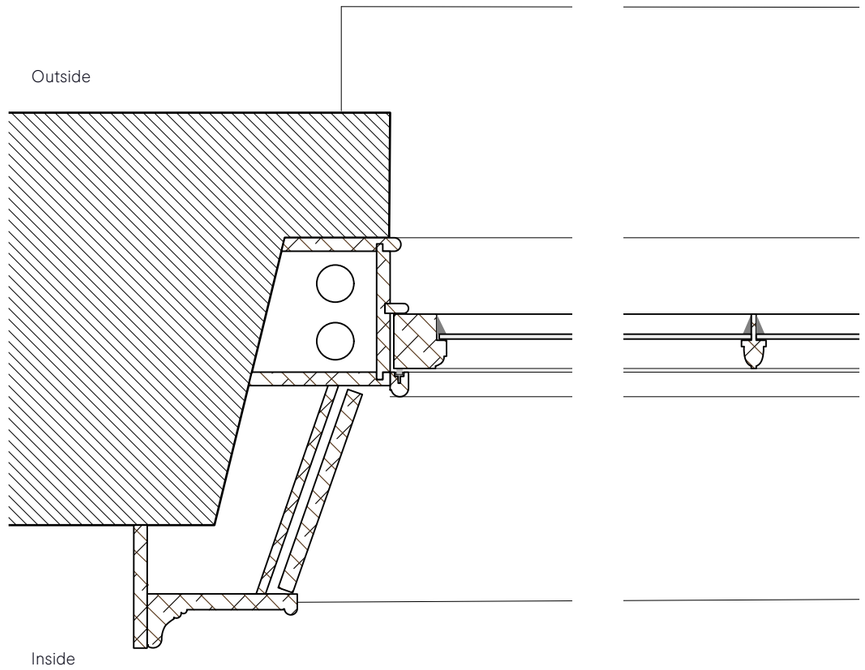

Jamb detail (as existing)
1:5@A3

Glazing bar detail (as existing)
1:5@A3



South West Elevation
1:200@A3

PLANNING & LISTED BUILDING CONSENT Notes

A. All Drawings to be read in conjunction with supporting Design & Heritage Statement
B. Do not scale from this drawing use figured dimensions only. All dimensions are to be checked on site.
C. Contractor to report any discrepancies, drawing errors and omissions to Chalk Architects immeadiatley
D. All structural elements to Structural Engineer's details and specifications
E. All work subject to Listed Building Consents & Planning Approval including conditions issued by Local Planning Authority
F. All work to comply with guidance within relevant UK Building Regulations Approved Documents
G. All work subject to the Party Wall Act etc 1996.



Existing window damage to cill

Assessment on impact on significance as a heritage asset:

There are no works proposed beyond repairs which will have a positive impact on the historic fabric.

The impact on significance of the heritage asset is therefore considered to be neutral.

Revision: Date: Reason:

D

LBC

Manor Farmhouse, Windows only [SN10 5UE] **22-03.01W-306**

Window WG09

Scale:	Paper size:	Date:	Drawn by:	Checked by
as shown	A3	29/05/2023	SG	JM

Chalk.

Chartered Practice No.20035647 www.chalkarchitects.co.uk hello@chalkarchitects.co.uk © 2023. All Rights Reserved