0 10 15 M
1:200 @ A3

0 100 200 300 400 mm
1:5 @ A3

0 0.5 1.0 1.5 M
1:20 @ A3

0 50 150 mm
1:2 @ A3

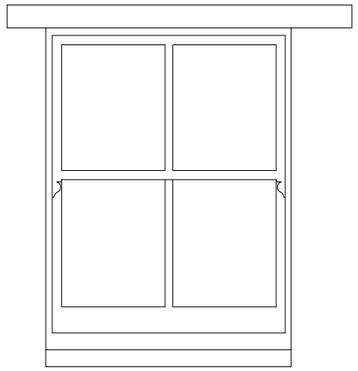

Original Elevation
1:20@A3

2 over 2 timber box framed lead weighted sash with horn detail to top sash, single glazed (float glass)
Timber cill and lintel

Outside

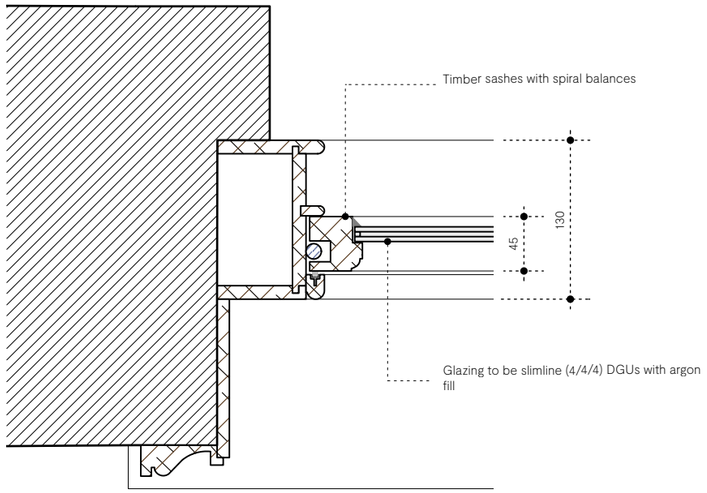

Inside

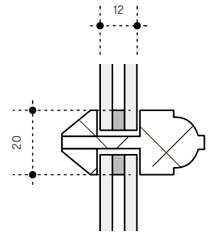

Proposed horizontal glazing bar detail
1:2@A3

Through glazing bars with timber glazing bead

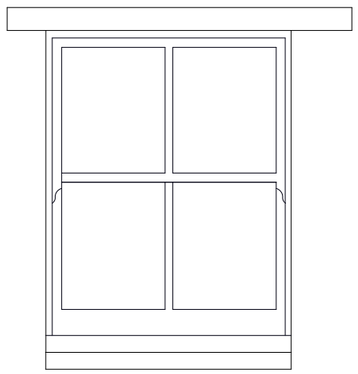

Proposed Elevation
1:20@A3

Timber box frame with spiral sash balances (horn detail retained)
All timber work to be painted white
Slimline 4/4/4 DGUs with through glazing bars (see detail)
Timber cill and lintel to be retained



South East Elevation
1:200@A3

C

PLANNING & LISTED BUILDING CONSENT Notes

A. All Drawings to be read in conjunction with supporting Design & Heritage Statement
B. Do not scale from this drawing use figured dimensions only. All dimensions are to be checked on site.
C. Contractor to report any discrepancies, drawing errors and omissions to Chalk Architects immeadiatley
D. All structural elements to Structural Engineer's details and specifications
E. All work subject to Listed Building Consents & Planning Approval including conditions issued by Local Planning Authority
F. All work to comply with guidance within relevant UK Building Regulations Approved Documents
G. All work subject to the Party Wall Act etc 1996.



Existing window

Assessment on impact on significance as a heritage asset:

The proposals are based on the details of the original window (believed to be late C20th) with improved thermal performance.

The impact on significance of the heritage asset is therefore considered to be minimal.

Revision: Date: Reason:

LBC

Manor Farmhouse, Windows only [SN10 5UE] **22-03.01W-315**

Window WF28

Scale:	Paper size:	Date:	Drawn by:	Checked by
as shown	A3	29/05/2023	SG	JM

Chalk.

Chartered Practice No.20035647 www.chalkarchitects.co.uk hello@chalkarchitects.co.uk © 2023. All Rights Reserved