LONGLEAF
TREE AND WOODLAND CONSULTANCY

Arboricultural Method Statement

Project	**Minety Substation Cable Installation**
Client	Axis PED
Report Reference	AMS-MSCR-0623
Date of Issue	21st June 2023

Report Completed by:

Gregory Adamson, Dip Arb L6 (ABC), MArborA,

Arboricultural Consultant

Longleaf Tree and Woodland Consultancy Ltd

M: 07426 803 004

E: greg@longleaftreeandwoodlandconsultancy.com

Contents

1 Introduction 3
1.1 Instructions 3
1.2 Provided Documents 3
2 Arboricultural Impact Assessment Overview 3
2.1 Background 3
2.2 National Planning Policy Context 3
2.3 Local Planning Policy Context 4
2.4 Statutory Designations 4
2.5 Non-statutory Designations 4
2.6 Trees - Overview 6
2.7 Third Party Trees 7
2.8 Tree Condition Overview 7
2.9 Summary of Impacts 9
2.10 Tree Work Considerations 9
2.11 Ancient Semi Natural Woodland 10
2.12 Tree Removals 10
2.13 Development within RPAs 10
2.14 Installation of Utilities 11
3 Arboricultural Method Statement 12
3.1 Background 12
3.2 Tree Protection Fencing and Construction Exclusion Zones 12
3.3 Ground Protection Specification 15
3.4 Ancient Semi Natural Woodland 15
3.5 Tree Pruning 15
3.6 Tree Removals 15
3.7 Installation of Utilities 16
3.8 Site Access 17
3.9 Materials, Refuelling, Toxic Chemicals and Fires 17
3.10 Plant/Machinery 17
3.11 Vehicle Loading/Unloading 17
3.12 Welfare Facilities 17
3.13 Parking, Materials and Waste Storage 17
3.14 Arboricultural Site Supervision and Monitoring 17
3.15 Contacts 18
Appendix A Tree Survey Schedule 19
Appendix B Tree Survey Key 22

Appendix C Tree Protection Plan 24
Appendix D Proposed Development 25
Appendix E Tree Protection Fencing Signage 26
Appendix F References 27

Report Version	Issue Date	Update Details
01	21/06/2023	N/A
-	-	-

1 Introduction

1.1 Instructions

1.1.1 Longleaf Tree and Woodland Consultancy Ltd have been instructed by Axis PED on behalf of Pelagic Energy Development Ltd (herein referred to as 'the Client'), to prepare an Arboricultural Method Statement in accordance with BS5837:2012 Trees in Relation to design, demolition and construction – recommendations, for the installation of a subterranean cable (referred to as the 'Proposed Development') to the immediate south of Minety Substation, Malmesbury, SN16 9DX (herein referred to as 'the Site').

1.1.2 This document includes the following:

- Outline Arboricultural Impact Assessment;
- Arboricultural Method Statement; and
- Tree Protection Plan.

1.2 Provided Documents

1.2.1 The following documents were provided:

Document Name	Reference Number	Date Received
Cable Route Lease Plan	2703-01-15	15/12/2022
Statutory Plan	2703-01-17	12/06/2022
OS_MasterMap	564310_750360	20/06/2023
OS_MasterMap_Imagery_Layer	594680_788787	20/06/2023

Table 1. Documents provided.

2 Arboricultural Impact Assessment Overview

2.1 Background

2.1.1 Arboricultural impact assessments assess the direct and indirect impacts of development to existing trees on a site and vice versa. Where necessary, suitable mitigation for identified impacts may be proposed.

2.2 National Planning Policy Context

2.2.1 The National Planning Policy Framework (NPPF) (2021) sets out the Government's planning policies for England, including their application. The NPPF aims to achieve sustainable development through economic, social and environmental objectives; broadly, the NPPF applies a presumption in favour of sustainable development and seeks to provide measurable net gains in biodiversity through the protection of existing, and establishment of resilient, coherent ecological networks.

2.2.2 Most notably within the NPPF (2021) regarding trees:

- 32. *"Planning policies and decisions should ensure that new streets are tree-lined, that opportunities are taken to incorporate trees elsewhere in developments (such as parks and community orchards), that appropriate measures are in place to secure the long-term maintenance of newly-planted trees, and that existing trees are retained wherever possible. Applicants and local planning authorities should work with highways officers and tree officers to ensure that the right trees are*

planted in the right places, and solutions are found that are compatible with highways standards and the needs of different users."

- 174. *"Planning policies and decisions should contribute to and enhance the natural and local environment…. b) recognising the intrinsic character and beauty of the countryside, and the wider benefits from natural capital and ecosystem services – including the economic and other benefits of the best and most versatile agricultural land, and of trees and woodland".*
- 180. "c) development resulting in the loss or deterioration of irreplaceable habitats (such as ancient woodland and ancient or veteran trees) should be refused, unless there are wholly exceptional reasons and a suitable compensation strategy exists".

2.3 Local Planning Policy Context

2.3.1 Local Planning Authorities (LPAs) in England have a statutory duty to consider both the protection and planting of trees when considering planning applications. The potential impact of development on all trees is therefore a material consideration.

2.3.2 The Site is within the planning authority of Wiltshire Council.

2.4 Statutory Designations

2.4.1 No tree preservation order (TPO) or conservation area (CA) records are publicly available online for the Site.

2.4.2 Full planning permission is an exception to apply to undertake works to trees subject to Tree Preservation Orders, an exception to give notice to undertake works to trees within a Conservation Area and an exemption to apply for a Felling Licence from the Forestry Commission.

2.5 Non-statutory Designations

2.5.1 Following a review of Defra's Magic Map[1] on 20th June 2023, two registered ancient semi-natural woodlands (ASNW), and three priority habitat inventory – deciduous woodland (England) designations are identified on Site (as shown in the Figure below).

[1] https://magic.defra.gov.uk/magicmap.aspx

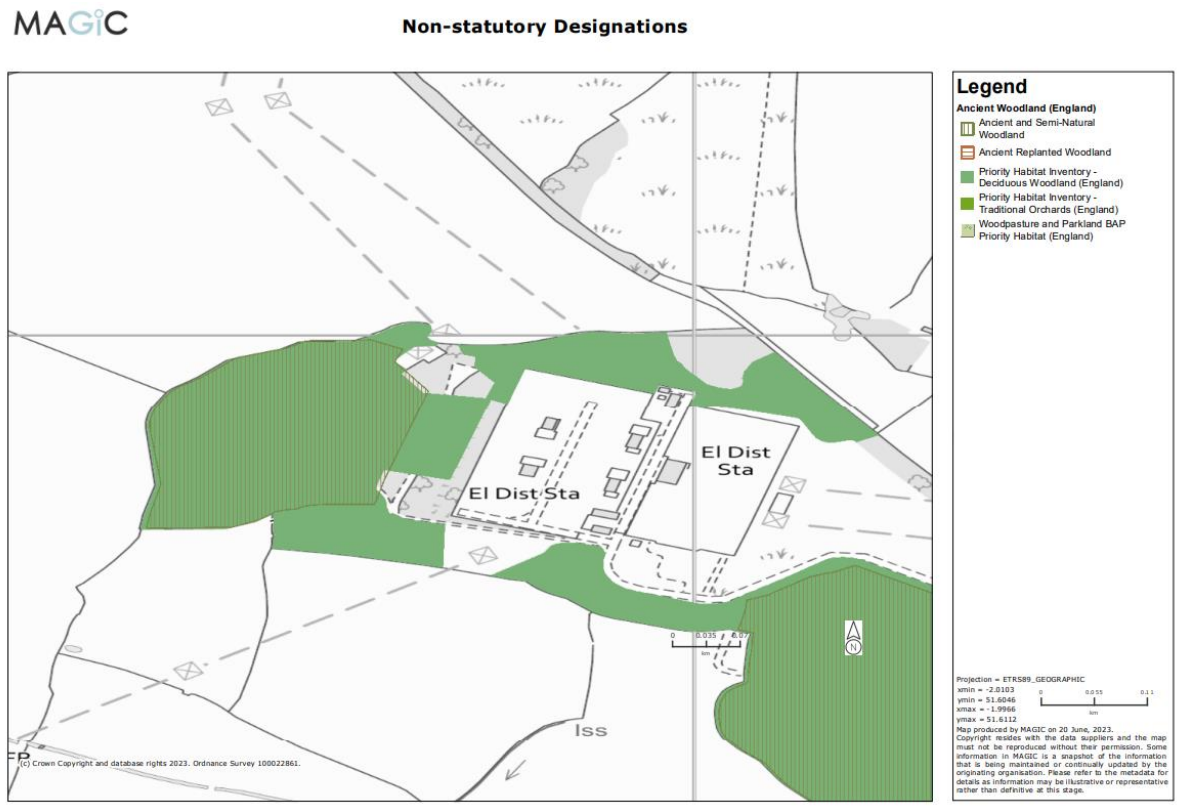

Figure 1. Excerpt from Defra's Magic Map showing no non-statutory designations on Site.

2.5.2 ASNW registered boundaries have been plotted on the Tree Protection Plan (TPP) utilising data retrieved from Natural England[2] (publicly available spatially arranged digital mapping). Standing advice recommends a 15m buffer zone from the registered boundary (Natural England and Forestry Commission 2022); these have been plotted on the TPP.

2.5.3 Following a review of the Woodland Trust's Ancient Tree Inventory[3], no recorded individual ancient, veteran or notable trees are identified on or immediately adjacent to the Site (as shown in the Figure below).

2.5.4 No ancient, veteran or notable individual trees were identified during the fieldwork.

[2]https://www.data.gov.uk/dataset/9461f463-c363-4309-ae77-fdcd7e9df7d3/ancient-woodland-england
[3]https://ati.woodlandtrust.org.uk/treesearch/?v=1939157&ml=map&z=13&nwLat=53.417309955663455&nwLng=-1.6348799218750365&seLat=53.34491727525588&seLng=-1.3052900781250365



Figure 2. Excerpt from the Woodland Trust's Ancient Tree Inventory.

2.6 Trees - Overview

2.6.1 In total, 13 tree features were identified during the survey, formed of four individual trees, three woodlands and six tree groups.

2.6.2 The distribution of tree features as per the BS5837:2012 non-fiscal quality is shown in the Figure below.

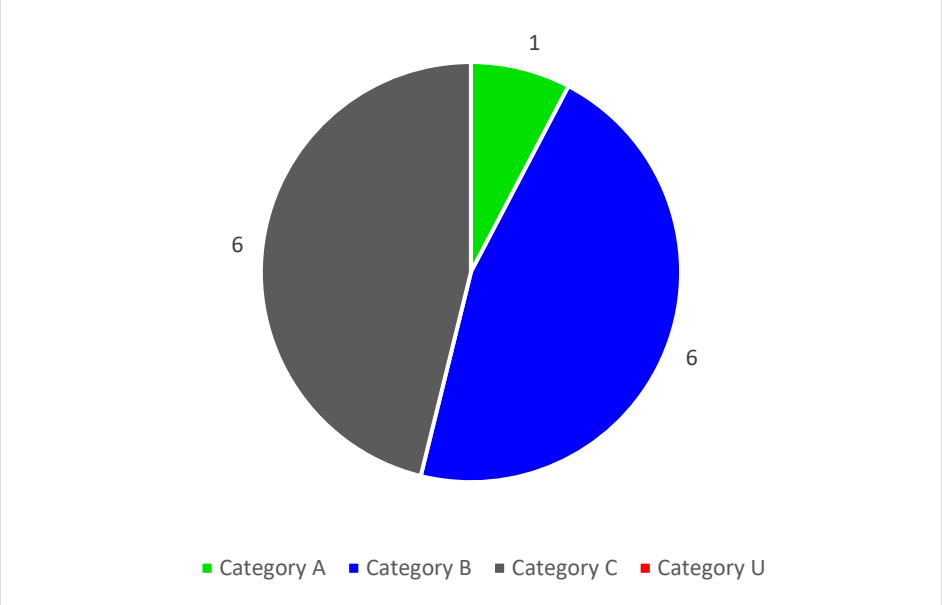

Figure 3. Distribution of categories as per BS5837:2012.

2.6.3 Tree genera and species identified on Site are provided in the Table below.

Common Name (*Scientific Name*)
aspen (*Populus tremula)*
blackthorn (*Prunus spinosa)*
common ash (*Fraxinus excelsior)*
common hawthorn (*Crataegus monogyna)*
elder (*Sambucus nigra)*

Common Name (*Scientific Name*)
field maple (*Acer campestre)*
goat willow (*Salix caprea)*
gorse (*Ulex europaeus)*
hazel (*Corylus avellana)*
pedunculate oak (*Quercus robur)*
sycamore (*Acer pseudoplatanus)*
Turkey oak (*Quercus cerris)*
wild cherry (*Prunus avium)*

Table 2. Tree genera and species identified on Site.

2.6.4 Trees on Site are identified within the age ranges of young to ancient. Approximate age range distribution is illustrated within the Figure below.

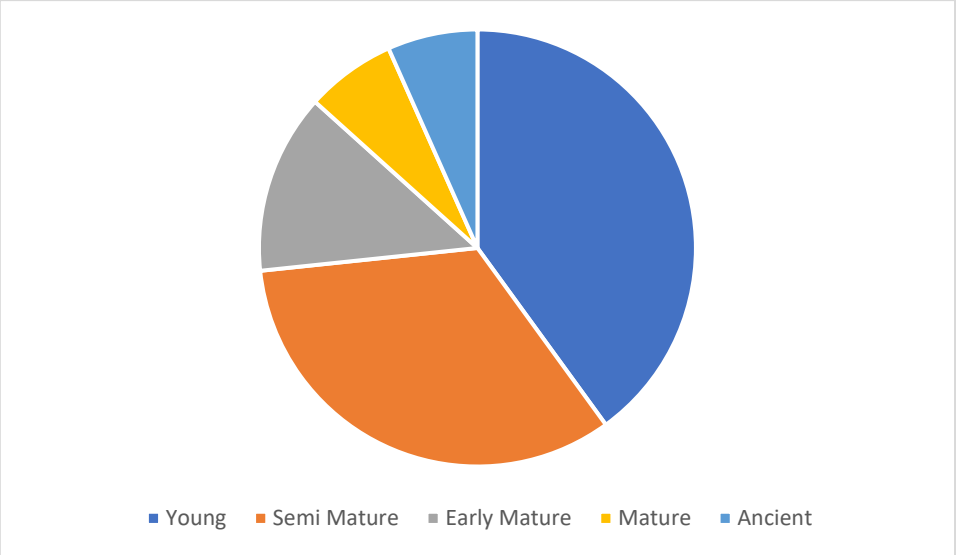

Figure 4. Age range distribution of tree features on Site.

2.7 Third Party Trees

2.7.1 All trees on Site are of third-party ownership.

2.7.2 Third party trees may not be removed to facilitate any development unless explicitly agreed (preferably in writing) by the tree owner prior to the submission for planning consent.

2.7.3 Works to third party trees, subject to planning permission or a tree works application, may only be undertaken as established under common law. The person(s) undertaking the works have a legal duty of care to take reasonable care, and may be liable if the trees are damaged or become unstable. All arisings must be offered back to the tree owner prior to disposal.

2.8 Tree Condition Overview

2.8.1 Trees on Site are identified in a range of structural and physiological conditions (e.g., good to dead).

2.8.2 The Site contains a significant population of the native ash (*Fraxinus excelsior)* with signs and symptoms of ash dieback. Across Britain, the native ash is in significant decline due to the non-native fungus *Hymenoscyphus fraxineus* (ash dieback). Ash trees may have natural immunity to ash dieback however, the majority of the ash population is susceptible (around 80 - >90% of trees). Once infected, ash trees initially showing minor symptoms may decline rapidly over a few years.

2.8.3 This is most notable for the woodlands W001 and W004, both of which contain likely planted ash dominant mixes (as visible in the grid pattern and even density). Both woodlands are at significant risk of high forest canopy loss.

2.8.4 Ash trees showing late-stage symptoms of ash dieback may become embrittled, either due to degradation/dysfunction of the wood substrate from ash dieback or from secondary pathogens. The subsequent removal of trees in the late stages of ash dieback may become hazardous to contractors undertaking tree removal. Removal of ash trees prior to this stage is therefore recommended.

2.8.5 The Figures below show a physiologically normal ash off Site, compared to the Site's ash woodland population, with significant dieback, poor bud density and overall low live crown ratios clearly visible.



Figure 5. Example ash with good bud density off Site.



Figure 6. Example ash woodland on Site with poor bud density and deviation in normal branching pattern, a symptom of physiological decline.

2.8.6 It is generally accepted that a single species should form no more than 10% of an urban forest population, due to the potential risk to canopy cover should that species be lost (due to climate change, pests and diseases etc). This percentage contribution may be increased where required for forestry and or conservation tree planting schemes.

2.8.7 The scheme therefore represents a significant opportunity to increase the tree species diversity on Site through replanting and secure the long-term retention of high-forest canopy cover on Site at risk from ash dieback.

2.8.8 Consideration must be made for the monitoring of ash trees on and immediately adjacent to the Site and their removal where appropriate. It is recommended that monitoring is undertaken annually in summer during full leaf flush.

2.8.9 Full details of tree condition, including any tree work recommendations can be found in the Tree Survey Schedule included as Appendix A.

2.9 Summary of Impacts

2.9.1 A summary of identified impacts to existing trees to facilitate the Proposed Development are provided below.

	Categorisation as per BS5837:2012			
Impacts	**Category A / High Quality**	**Category B / Moderate Quality**	**Category C / Low Quality**	**Category U / Unsuitable for Retention**
Tree Removals	0	W001 (part) and W004 (part).	G003 (part), G008 (part) and G011 (part).	0
Total	**0**	**Part of Two Woodlands.**	**Part of Three Tree Groups.**	**0**
Facilitation Pruning	0	0	0	0
Total	**0**	**0**	**0**	**0**
Development within RPAs	0	W001 (part) and W004 (part).	G003 (part), G008 (part) and G011 (part).	0
Total	**0**	**Part of Two Woodlands.**	**Part of Three Tree Groups.**	**0**
RPA Access	0	W001 (part) and W004 (part).	G003 (part), G008 (part) and G011 (part).	0
Total	**0**	**Part of Two Woodlands.**	**Part of Three Tree Groups.**	**0**

Table 3. Summary of Impacts.

2.10 Tree Work Considerations

2.10.1 The Construction (Design and Management) Regulations (2015) states that developers and contractors have a responsibility for the health and safety of their actions; where trees are left in an unstable or hazardous condition (e.g., through unauthorised excavation works within an RPA), the Health and Safety Executive (HSE) could seek to prosecute those responsible along with the potential for further civil claims.

2.10.2 Compliance to the Wildlife and Countryside Act (1981 - as amended), the Countryside Rights of Way Act (2000) and the Conservation of Habitats and Species Regulations (2017) must be observed when undertaking any tree works on Site. This most notably applies to the presence of bats and nesting birds. It is recommended that significant tree and/or hedgerow works take place outside of the typical bird nesting season (March to September). The advice of a suitably qualified ecologist is recommended in relation to any potential impacts on protected species.

2.10.3 Compliance with the Official Controls (Plant Health and Genetically Modified Organisms) (England) Regulations 2019 and the Plant Health Act 1967, which regulates biosecurity standards of trees and wood pests, must be observed during all tree works.

2.11 Ancient Semi Natural Woodland

2.11.1 The buffer zone for W012 extends into the Site and partially into the excavation footprint. Considering the surrounding land-use as an electrical substation, this incursion is unavoidable. The impact of this incursion is considered to be low considering the type of impact, its extent, duration and the surrounding land-use.

2.11.2 No loss or deterioration to the ancient semi natural woodland is considered likely from the Proposed Development.

2.12 Tree Removals

2.12.1 Partial removals are required within W001, G003, W004, G008 and G011.

2.12.2 The removal of trees on the edge of W004 is likely to consist of at least one row with the total extent of removals at least 6m in width. Tree removals will be made back to the nearest windfirm edge, with retained trees selected for good physiological condition and codominant to dominant strata positioning.

2.12.3 The risk of windthrow is considered low due to the tree removal extent positioned to the north/northeast of the woodlands (prevailing wind being south/southwest).

2.12.4 Tree removals are necessary due to the siting requirements of the excavation; the footprint may not be moved due to access requirements by the National Grid, and the type of engineered road surface present, designed to withstand significant loads (e.g., for heavy equipment haulage to the substation).

2.12.5 Tree removals represent an opportunity to replant and/or underplant the severely declining ash dominant overstory. Where this is not feasible, off-site mitigation for tree loss should be explored with WC.

2.13 Development within RPAs

Impact of Development within RPAs

2.13.1 Excavations within the RPAs of retained trees is likely to lead to premature tree death through the severance of roots causing:

- A negative effect on structural stability where significant roots are severed in immediate proximity to a retained tree;
- A negative effect on physiological health by limiting water and nutrient uptake, and energy storage; and
- A potential negative affect on life expectancy by facilitating an ingress for wood decay fungi and/or pests and pathogens, and by reducing vitality which may create a spiral of physiological decline.

2.13.2 The potential impact of excavation works within RPAs to retained trees is therefore considered significant.

Analysis of Development within RPAs

2.13.3 Excavation works must avoid the severance of significant roots and bundles of roots (>25mm in diameter (BS5837:2012)).

2.13.4 Development must not increase soil levels which will likely cause a significant increase in mechanical resistance, and decrease soil aeration, moisture and fertility.

2.13.5 Development must not facilitate the leaching of toxic chemicals into the surrounding rootzone.

2.13.6 Development must facilitate the normal infiltration of water and gaseous exchange into the rootzone.

2.13.7 Access by plant and personnel must not directly contact above ground stem or branch structures with plant, tools or other machinery, or indirectly damage retained trees through compaction of unmade ground.

2.14 Installation of Utilities - Background

2.14.1 The installation of utilities within RPAs utilising standard techniques (such as open trenching utilising plant) may impact retained trees significantly through the severance of roots causing:

- A negative effect on structural stability where significant roots are severed in immediate proximity to a retained tree;
- A negative effect on physiological health by limiting water and nutrient uptake, and energy storage; and
- A potential negative affect on life expectancy by creating an ingress for wood decay fungi and/or pests and pathogens, and by reducing vitality which may create a spiral of physiological decline.

2.14.2 The potential impact of excavations utilising standard methodologies to install utilities within the RPAs of retained trees is considered significant.

2.14.3 The default position is that new utility runs should avoid the RPAs of retained trees. Where this is not feasible, horizontal drilling to subvert RPAs should be utilised. Where horizontal drilling is not feasible, excavations to install utilities must minimise the severance of significant roots and bundles of roots, protect the rooting environment from compaction and where roots are severed, leave a clean-cut surface.

2.14.4 BS5837:2012 allows for the severance of roots smaller than 25mm in diameter (unless roots occur in clumps). It may be feasible to sever a root or bundles of roots greater than 25mm in diameter following assessment by a suitably qualified arboriculturist. However, the default position must be that roots and bundles of roots greater than 25mm in diameter are to be retained and protected.

2.14.5 The National Joint Utilities Group (NJUG) Guidelines for the Planning, Installation and Maintenance of Utility Apparatus in Proximity to Trees, Volume 4 (2007), is the best practise document regarding the installation of utilities in proximity to trees.

2.14.6 NJUG (2007) identifies three zones when undertaking excavations to install utilities in proximity to retained trees. These are:

"*PROHIBITED ZONE – 1m from trunk. Excavations of any kind must not be undertaken within this zone unless full consultation with the local authority Tree Officer is undertaken. Materials, plant and spoil must not be stored within this zone.*

PRECAUTIONARY ZONE – 4 x tree circumference. Where excavations must be undertaken within this zone the use of mechanical excavation plant should be prohibited. Precautions should be undertaken to protect any exposed roots. Materials, plant and spoil should not be stored within this zone. Consult with the local authority Tree Officer if in any doubt.

PERMITTED ZONE – outside of the precautionary zone. Excavation works may be undertaken within this zone, however caution must be applied and the use of mechanical plant limited. Any exposed roots should be protected."

2.14.7 Pipework must be constructed to resist future incursion by tree roots.

2.14.8 Where significant root retention is not feasible to install new utilities, tree removal is likely to be required.

3 Arboricultural Method Statement

3.1 Background

3.1.1 This Arboricultural Method Statement (AMS) details the specification for tree protection measures and how sensitive operations are to be achieved in close proximity to retained trees. It also addresses the general management of Site activities to ensure that retained trees are not inadvertently damaged.

3.1.2 This document must be read in conjunction with the Tree Protection Plan (TPP). Copies of this AMS and the Tree Protection Plan must be permanently available on Site for reference throughout the development cycle.

3.1.3 All personnel entering the Site must be made fully aware of its contents and the implications for work they may be involved in. All elements of the agreed AMS must be adhered to in full, failure to do so could result in damage to significant trees and enforcement action by Wiltshire Council (WC).

3.2 Tree Protection Fencing and Construction Exclusion Zones

3.2.1 The Site manager has overall responsibility for ensuring the maintenance of the Tree Protection Fencing (TPF) as shown on the Tree Protection Plan (TPP).

3.2.2 Fit for purpose barriers, to exclude construction activities from the Construction Exclusion Zones of retained trees will be required around retained tree's crown spreads or root protection areas (RPAs), or whichever is greater, in proximity to Site works. Exceptions to this are identified on the Tree Protection Plan.

3.2.3 Tree Protection Fencing must be installed prior to the commencement of works and dismantled upon Site completion. Barrier positions are shown on the Tree Protection Plan.

3.2.4 Barriers must be of a vertical and horizontal scaffold framework, adequately braced to resist foreseeable impacts, secured to the ground. Welded mesh panels must then be secured to the framework. Barriers may be either freestanding, or driven into the ground (taking necessary precautions for the presence of underground services and significant roots).

3.2.5 Areas within Tree Protection Fencing will be maintained as Construction Exclusion Zones (CEZs) and must be considered sacrosanct. Locations of barriers may not be altered without prior permission from the Site Arboriculturist and/or WC.

3.2.6 The default specifications are shown in the Figures below.

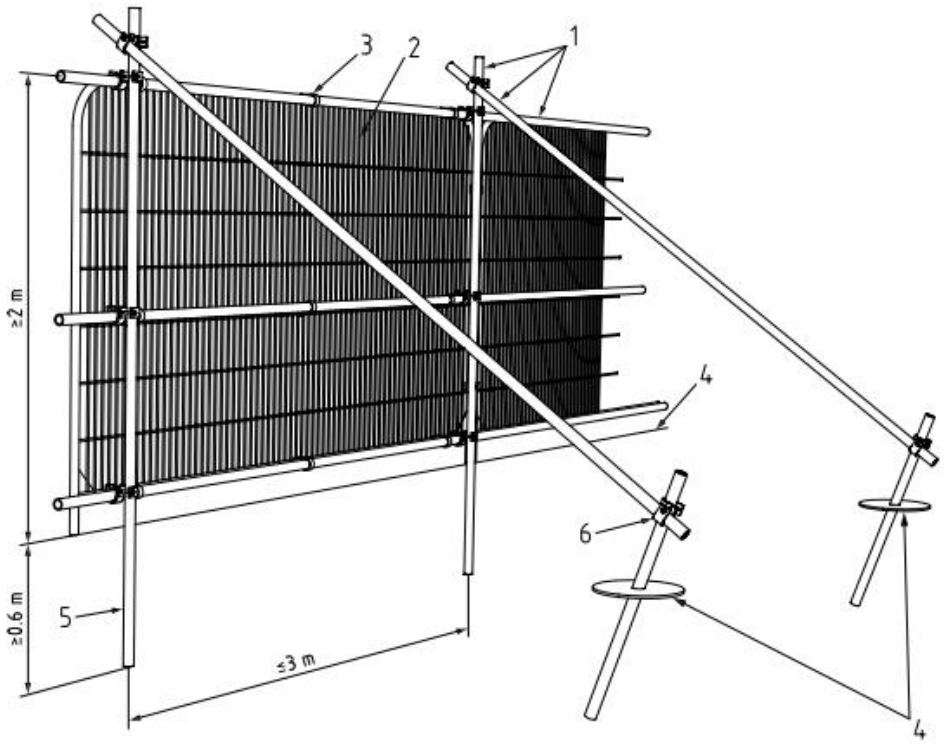

Key

1 Standard scaffold poles
2 Heavy gauge 2 m tall galvanized tube and welded mesh infill panels
3 Panels secured to uprights and cross-members with wire ties
4 Ground level
5 Uprights driven into the ground until secure (minimum depth 0.6 m)
6 Standard scaffold clamps

Figure 7. Default barrier specification (Figure 2. of BS5837:2012).

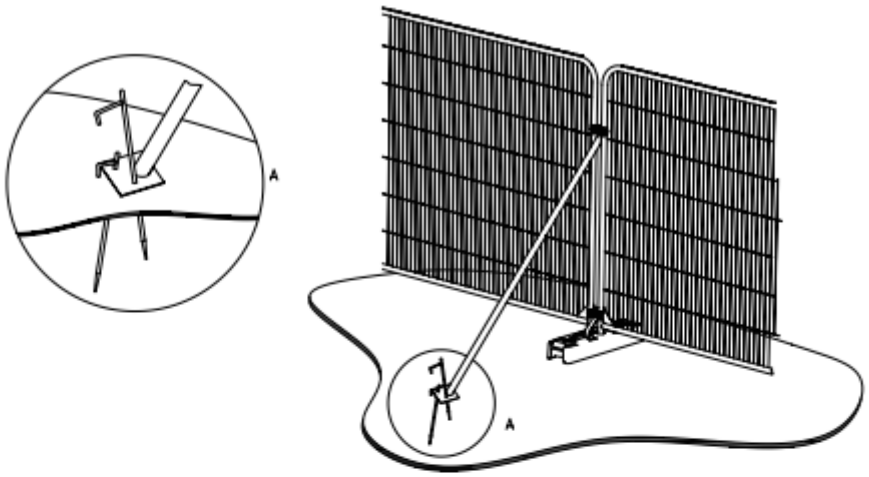

a) Stabilizer strut with base plate secured with ground pins

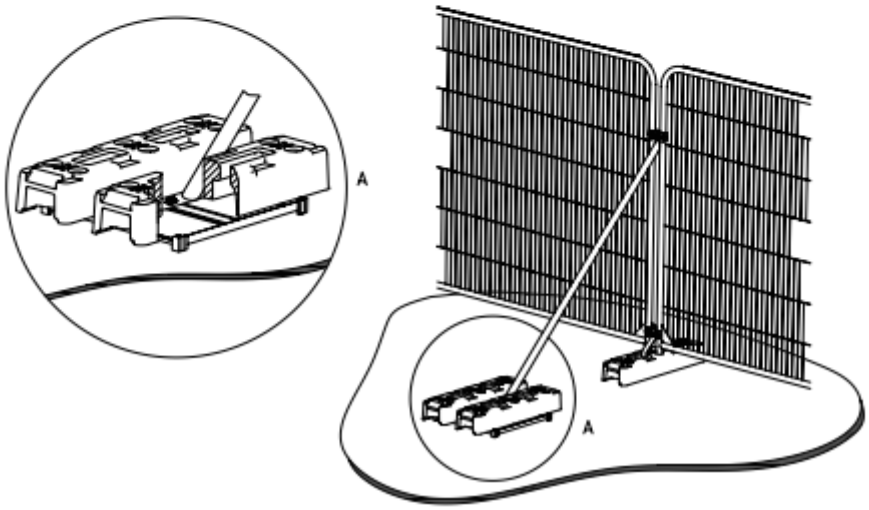

b) Stabilizer strut mounted on block tray

Figure 8. Default barrier specification (Figure 3. of BS5837:2012).

3.2.7 Suitable all-weather signage will be fixed to the fencing, to notify Site staff and visitors of the CEZ and its purpose (example provided in Appendix E).

3.2.8 An order of operations relating to the erection, maintenance and dismantling of the TPF is shown in the table below.

Stage	Tree Protection Fencing Methodology
Stage 1 **Prior to commencement of works**	Identify area for excavation works on the Tree Protection Plan (TPP). Fencing is to be installed as per Figures 1 and 2 above. The TPF is to be positioned as shown on the TPP.
Stage 2 **Site Works**	Maintain TPF with area behind enforced as a Construction Exclusion Zone. No access, storage or similar activities are to be permitted within.

Stage	Tree Protection Fencing Methodology
Stage 3 **Completion of Site Works**	Dismantle fencing on full completion of Site works (including after the movement of all materials and vehicles).

Table 4. Tree Protection Fencing - Management.

3.3 Ground Protection Specification

3.3.1 Where access into RPAs is required for construction works, suitable ground protection will be required (as shown on the Tree Protection Plan). No ground protection is required where existing surfacing is present which will distribute any loading applied.

3.3.2 The following identifies the required specification for access into RPAs:

- For pedestrian use: a single thickness of scaffold board, placed on top of either a suspended walkway (such as single scaffold frame) or on a compressive resistant layer (such as 100mm depth of woodchip) laid onto a geotextile membrane.
- For pedestrian operated plant up to gross 2 tonne weight: proprietary inter-linked ground protection boards placed on top of a compression resistant layer (such as 150mm depth of woodchip, laid on a geotextile membrane).
- For traffic exceeding 2 tonnes gross weight: a proprietary system (such as cellular rafts or pre-cast concrete slabs) to an engineering specification designed in conjunction with arboricultural advice, designed to dissipate the expected loading.

3.3.3 Trees and groups subject to RPA access which require the use of suitable ground protection are outlined in the Table below.

Tree Reference Number
W001 and W004.

Table 5. Ground protection for trees summary.

3.4 Ancient Semi Natural Woodland

3.4.1 No access, materials storage, parking, excavations or any other works necessary for the implementation of the Proposed Development are permissible within the footprint of W012.

3.5 Tree Pruning

3.5.1 No pruning works are identified as being required to facilitate the Proposed Development.

3.6 Tree Removals

3.6.1 Partial removals are required within W001, G003, W004, G008 and G011.

3.6.2 The total extent of removals will be at least 6m in width. Tree removals must be made back to the nearest windfirm edge. This is likely to be trees in a physiologically good condition, with codominant to dominant canopy strata positioning.

3.6.3 Retained trees and the extent of tree removals will be assessed by the Site Arboriculturist.

3.7 Installation of Utilities

Prior to Site Works

3.7.1 Prior to Site works, a Site walkover by the Site Arboriculturist and Site Manager is to be undertaken along the route to mark out the development footprint and determine the extent of tree removals. Trees will be sprayed with forestry paint for identification of removal by contractors.

Site Preparation

3.7.2 Tree Protection Fencing (Section 2.2) and suitable ground protection (Section 2.3) are to be installed as shown on the TPP.

Location of Excavations

3.7.3 Excavations are to be undertaken as far from retained trees as feasible.

Excavation Methodology

3.7.4 The methodology for pipeline installation within RPAs is outlined in the Table below.

RPA Excavation Methodology
Install TPF and any ground protection required prior to commencement of works. Excavation footprint at furthest point feasible within route extent from tree base(s). Plant may be utilised to undertake excavation. A banksman must be present. A toothless bucket is required to minimise the likelihood for tearing/ripping wounds to roots. Plant will carefully remove horizons of soil. Where roots are encountered, the severance of roots and bundles of roots under 25mm in diameter may be undertaken utilising a sharp tool (such as a knife or secateurs) cutting the root back beyond the face of the excavation, leaving a clean face to the cut, preferably back to a parent root where possible (but no more than 100mm from the face of the excavation). Where roots or significant bundles of roots over 25mm in diameter are encountered, these are to be assessed by the Site Arboriculturist. All spoil/ arisings from excavation will be placed onto ground protection boards to prevent compaction, ground level changes and to assist in removal or reinstatement, where within RPAs. Excavation arisings are to be reinstated in the correct order to which they were removed, retaining the correct topsoil horizons. The final surface of the trench must not be compacted. Where necessary, the final surface may be reseeded with standard perennial grass seed mix. Further tree removals may be required as necessary to prevent the retention of potential destabilised trees.

Table 6. RPA Excavation Methodology.

Completion

3.7.5 Tree Protection Fencing and ground protection are only to be removed following full completion of works in proximity to retained trees. This includes all landscaping works and materials/storage etc.

3.8 Site Access

3.8.1 All Site access is to abide by the specifications set out within this AMS. All personnel entering the Site must be made fully aware of the contents of this AMS and the implications for work they may be involved in.

3.8.2 No access may be undertaken within Construction Exclusion Zones on Site. These zones are considered to be all RPAs and/or crown spreads of retained trees (whichever is greater). Areas designated for Construction Exclusion Zones access, utilising appropriate ground protection and TPF, are shown on the TPP.

3.9 Materials, Refuelling, Toxic Chemicals and Fires

3.9.1 The mixing of materials and any re-fuelling shall take place at least 5m from the RPA of any retained tree**,** taking into account any potential for run off. This includes the mixing of concrete and any chemicals which are likely to be toxic to trees.

3.9.2 Bunding with robust impermeable polythene sheeting and sand bags must be put in place to prevent accidental run off reaching the rooting zone of retained trees where this considered a material risk.

3.9.3 No fires shall take place within any RPAs or within 10m of any part of a retained tree.

3.10 Plant/Machinery

3.10.1 A banksman will be in place for any vehicle and/or plant operations which occur within 10m of any part of a retained tree.

3.11 Vehicle Loading/Unloading

3.11.1 The loading and unloading of materials, tools, plant or any other material or equipment must be undertaken outside of the RPA of any retained tree. Where this is not feasible, suitable ground protection must be utilised.

3.11.2 Where cranes or equivalent are utilised for loading/unloading, a banksman must be in place to ensure no direct contact is made with any part of a retained tree.

3.12 Welfare Facilities

3.12.1 Site welfare must be positioned outside of the RPA of any retained tree on Site. Where this is not feasible, suitable ground protection must be utilised.

3.13 Parking, Materials and Waste Storage

3.13.1 Parking, and the storage of materials, tools and waste may not be undertaken within any RPA. Where this is not feasible, suitable ground protection must be utilised.

3.13.2 No tools, equipment, materials etc., may be lent or otherwise stored against any retained tree.

3.14 Arboricultural Site Supervision and Monitoring

3.14.1 A summary of the Site supervision by a suitably qualified arboriculturist is provided in the Table below.

Construction Constraint	Arboricultural Site Supervision Required	Stage	Visit Sequence	Status
Identification and markup of trees for removal.	Yes	Pre-Construction	1	TBC
Identification of TPF positions for installation.	Yes	Pre-Construction	1	TBC
Installation of Tree Protection Fencing (TPF) and suitable ground protection (where required).	Yes	Pre-Construction	2	TBC
Monitoring of excavations within RPAs.	Yes	Construction	2	TBC
Report of adherence to Arboricultural Method Statement.	Yes	Pre to Post-Construction.	1-2	TBC

Table 7. Arboricultural Site supervision summary.

3.14.2 Site supervision is to be documented in a short report with photographic and observational data, to be submitted to WC as evidence of adherence to this document. The report will be submitted upon completion of the development.

3.15 Contacts

3.15.1 Contact details for Site personnel are provided in the table below.

Name	Company	Role	Contact No.	Email
TBC	TBC	Tree Officer	TBC	TBC
TBC	TBC	Site Arboriculturist	TBC	TBC
TBC	TBC	Site Manager	TBC	TBC
TBC	TBC	Site Engineer	TBC	TBC

Table 8. Contact details for Site personnel.

Appendix A Tree Survey Schedule

Ref.	Common Name	Scientific Name	Height (m)	Stem diameter(s) (mm)	RPA	North	East	South	West	Crown Clearance (m)	Lowest Branch (m)	Lowest Branch Dir	Life Stage	Physiological Cond	Structural Cond	General Observations	Rem. Contrib.	Retention Category	Work Recommendations	Retained (RET) / Removed (REM) for the Development	Impact
W001	Common Ash, Field Maple, Blackthorn, Hazel, Turkey Oak, Aspen, Common Hawthorn, Goat Willow	*Fraxinus excelsior, Acer campestre, Prunus spinosa, Corylus avellana, Quercus cerris, Populus tremula, Crataegus monogyna, Salix caprea*	15	< 640	As shown on the plan.	As shown on the plan.				-	-	-	Young - Semi Mature	Good - Dead	Good - Poor	Plantation - grid of 1.5mx1.5m. Ash and field maple dominant mix. Ash showing significant signs and symptoms of ash dieback. Edge trees north with diameters sub 120mm. Scrub boundary south. Significant RPAs plotted individually. Majority of stems within woodland sub 270mm.	20+ Years	B2	Consider woodland improvement works to secure long term retention of continuous canopy cover under threat from ash dieback (when funds allow).	**RET / Part REM**	Keyhole felling for cable installation and works access.
G002	Gorse, Hazel, Goat Willow, Common Hawthorn, Field Maple, Pedunculate Oak, Blackthorn	*Ulex europaeus, Corylus avellana, Salix caprea, Crataegus monogyna, Acer campestre, Quercus robur, Prunus spinosa*	3	< 130	As shown on the plan.	As shown on the plan.				-	-	-	Young	Good	Fair	Scrub.	10+ Years	C2	-	**RET**	-
G003	Field Maple, Goat Willow, Pedunculate Oak, Blackthorn	*Acer campestre, Salix caprea, Quercus robur, Prunus spinosa*	4	< 50#	As shown on the plan.	As shown on the plan.				0	-	-	Young	Good	Fair	No access. Mass of scrub regeneration.	10+ Years	C2	-	**RET / Part REM**	Keyhole felling for cable installation and works access.
W004	Pedunculate Oak, Blackthorn, Turkey Oak, Wild Cherry, Common Ash, Field Maple, Goat Willow, Aspen	*Quercus robur, Prunus spinosa, Quercus cerris, Prunus avium, Fraxinus excelsior, Acer campestre, Salix caprea, Populus tremula*	15	< 350	As shown on the plan.	As shown on the plan.				-	-	-	Young - Semi Mature	Good - Dead	Good - Poor	Ash dominant. Field maple abundant. Occasional oak. Severe symptoms of ADB throughout. One tree every circa 2m. Stems circa 350mm within northern section.	20+ Years	B2	Consider woodland improvement works to secure long term retention of continuous canopy cover under threat from ash dieback (when funds allow).	**RET / Part REM**	Section felling for cable installation and works access.

Ref.	Common Name	Scientific Name	Height (m)	Stem diameter(s) (mm)	RPA	North	East	South	West	Crown Clearance (m)	Lowest Branch (m)	Lowest Branch Dir	Life Stage	Physiological Cond	Structural Cond	General Observations	Rem. Contrib.	Retention Category	Work Recommendations	Retained (RET) / Removed (REM) for the Development	Impact
G005	Pedunculate Oak, Aspen	*Quercus robur, Populus tremula*	15	< 700	As shown on the plan.	As shown on the plan.				-	-	-	Early Mature	Good	Fair	Five trees in row on southern woodland slope. Codominant in canopy. Major deadwood throughout. Stem wounds, likely limb dieback with dysfunction of functional units.	20+ Years	B1,2,3	-	**RET**	-
T006	Pedunculate Oak	*Quercus robur*	12	700#	Radius: 8.4m. Area: 222 sq m.	7	7	7	7	2	2	S	Mature	Fair	Good	No access. Established at woodland edge. Moderate deviation in branching pattern - crown gaps visible.	20+ Years	B1,2	-	**RET**	-
G007	Blackthorn, Elder, Field Maple, Common Hawthorn	*Prunus spinosa, Sambucus nigra, Acer campestre, Crataegus monogyna*	5	< 120	As shown on the plan.	As shown on the plan.				0	-	-	Young	Good	Fair	Scrub at woodland edge.	10+ Years	C2	-	**RET**	-
G008	Goat Willow, Common Ash, Field Maple, Hazel	*Salix caprea, Fraxinus excelsior, Acer campestre, Corylus avellana*	9	< 250	As shown on the plan.	As shown on the plan.				0	-	-	Semi Mature	Good	Poor	Dense copse of regenerating young trees under crown of partially collapsed willow. Likely to regenerate through either phoenix or harping with indefinite iterations.	10+ Years	C1,2	-	**RET / Part REM**	Section felling for cable installation and works access.
T009	Pedunculate Oak	*Quercus robur*	8	360,370	Radius: 6.2m. Area: 121 sq m.	5	5	5	5	1	3	W	Semi Mature	Good	Fair	Two trees established in immediate proximity. Codominant crowns.	20+ Years	B1,2	-	**RET**	-
T010	Pedunculate Oak	*Quercus robur*	6	240	Radius: 2.9m. Area: 26 sq m.	3	4	2	3	3	2	NE	Semi Mature	Good	Good	High future potential.	10+ Years	C1,2	-	**RET**	-
G011	Goat Willow, Hazel, Blackthorn, Common Ash, Pedunculate Oak	*Salix caprea, Corylus avellana, Prunus spinosa, Fraxinus excelsior, Quercus robur*	3	< 100	As shown on the plan.	As shown on the plan.				0	-	-	Young	Good	Fair	Scrub. Patchy development within dense herbaceous layer.	10+ Years	C2	-	**RET / Part REM**	Section felling for cable installation and works access.

Ref.	Common Name	Scientific Name	Height (m)	Stem diameter(s) (mm)	RPA	North	East	South	West	Crown Clearance (m)	Lowest Branch (m)	Lowest Branch Dir	Life Stage	Physiological Cond	Structural Cond	General Observations	Rem. Contrib.	Retention Category	Work Recommendations	Retained (RET) / Removed (REM) for the Development	Impact
W012	Hazel, Common Holly, Blackthorn, Elder, Pedunculate Oak, Common Hawthorn, Goat Willow	*Corylus avellana, Ilex aquifolium, Prunus spinosa, Sambucus nigra, Quercus robur, Crataegus monogyna, Salix caprea*	16	< 400	As shown on the plan.	As shown on the plan.				-	-	-	Ancient	Good - Dead	Good - Poor	Oak dominant woodland. Significant stems set back circa 5m from boundary. Scrub boundary – good ecotone.	40+ Years	A2,3	-	**RET**	Works access within buffer zone.
T013	Pedunculate Oak	*Quercus robur*	13	450	Radius: 5.4m. Area: 92 sq m.	6	4	4	6	2	4	NW	Early Mature	Good	Good	No access. Demarcates edge of group. Normal branching pattern and bud density.	20+ Years	B1,2	-	**RET**	-

Appendix B Tree Survey Key

Key	Description	
Tree No on plan	Identification number indicating individual tree (T), group (G), woodland (W) or hedge (H) on the plan.	
#	Indicates estimated dimensions for inaccessible trees, such as trees positioned outside of the site.	
Species	Species shown as common name first, followed by the scientific name.	
Ht	Height of tree, measured from ground level, given in metres (m). Recorded to the nearest half metre for dimensions up to 10m and the nearest whole metre over 10m.	
Ult height (m)	The predicted ultimate height of a tree based on data from NHBC, 2023.	
Crown Spread (M)	Crown spread of tree, measured from ground level, given in metres for cardinal points north, south, east and west. Rounded up to the nearest metre.	
Stem Dia @1.5m (mm)	Diameter of stem measured at 1.5m above ground level, given in milometers (mm), rounded to the nearest 10mm.	
RPA Radius (M)	Radius of root protection area, as defined by BS5837:2012 as twelve times the diameter of the stem(s) measured at 1.5m above ground level.	
RPA Circle Area (M^2)	Area of the root protection circle, given as metres squared.	
Ht of lowest branch (m) & direction of growth	Height of lowest branch measured from ground level, given in metres and the direction of the branch given as a cardinal point (e.g. northeast). Recorded to the nearest half metre for dimensions up to 10m and the nearest whole metre over 10m.	
Life Stage	Young	Tree(s) in the young growth phase for the species.
	Semi-mature	Tree(s) in semi-mature growth phase for the species.
	Mature	Tree(s) at maturity for species.
	Over-Mature	Tree(s) at over-maturity for species.
	Ancient/Veteran	Tree(s) considered to be either Ancient or Veteran.
Estimated Remaining Contribution in Years	Estimation of the tree's remaining contribution given in years, as either less than 10 years (<10), at least 10 years (10+), at least 20 years (20+) and at least 40 years (40+).	
General Observation	**Physiological (Phys)**	Good – Of normal physiological health for the species.
		Fair – Of identifiable physiological decline for the species from the considered normal.
		Poor – Of identifiable significant decline from the physiological normal of the species, likely requires management works unless indicated.
		Dead – Tree(s) dead. May still provide ecological value, such as standing deadwood or similar habitat.
	Structural (Struct)	Good - Of normal structural health for the species.
		Fair – Of identifiable deviation from the normal structural formation from the expected species growth habit.
		Poor – of identifiable significant deviation from the expected normal species structural condition. Likely requires management works unless indicated.
		Dead - Tree(s) dead. May still provide ecological value, such as standing deadwood or similar habitat.
Management Recommendations	Further works as identified by the Site survey, to be actioned as per the indicated timescale.	
Category of Retention	**Category A** - High Quality	
	Category B - Medium Quality	
	Category C - Low Quality	
	Category U - Unsuitable for retention (in the context of the current land use)	

Key	Description
Sub Category	**1 -** Mainly Arboricultural Qualities
	2 - Mainly Landscape Qualities
	3 - Mainly Cultural Values
Cardinal Points	**N** – North
	E – East
	S – South
	W - West
ADB	Ash dieback (*Hymenoscyphus fraxineus)*
AGL	Above ground level
GL	Ground level
DED	Dutch elm disease
FFB	Fungal fruiting body

Appendix C Tree Protection Plan

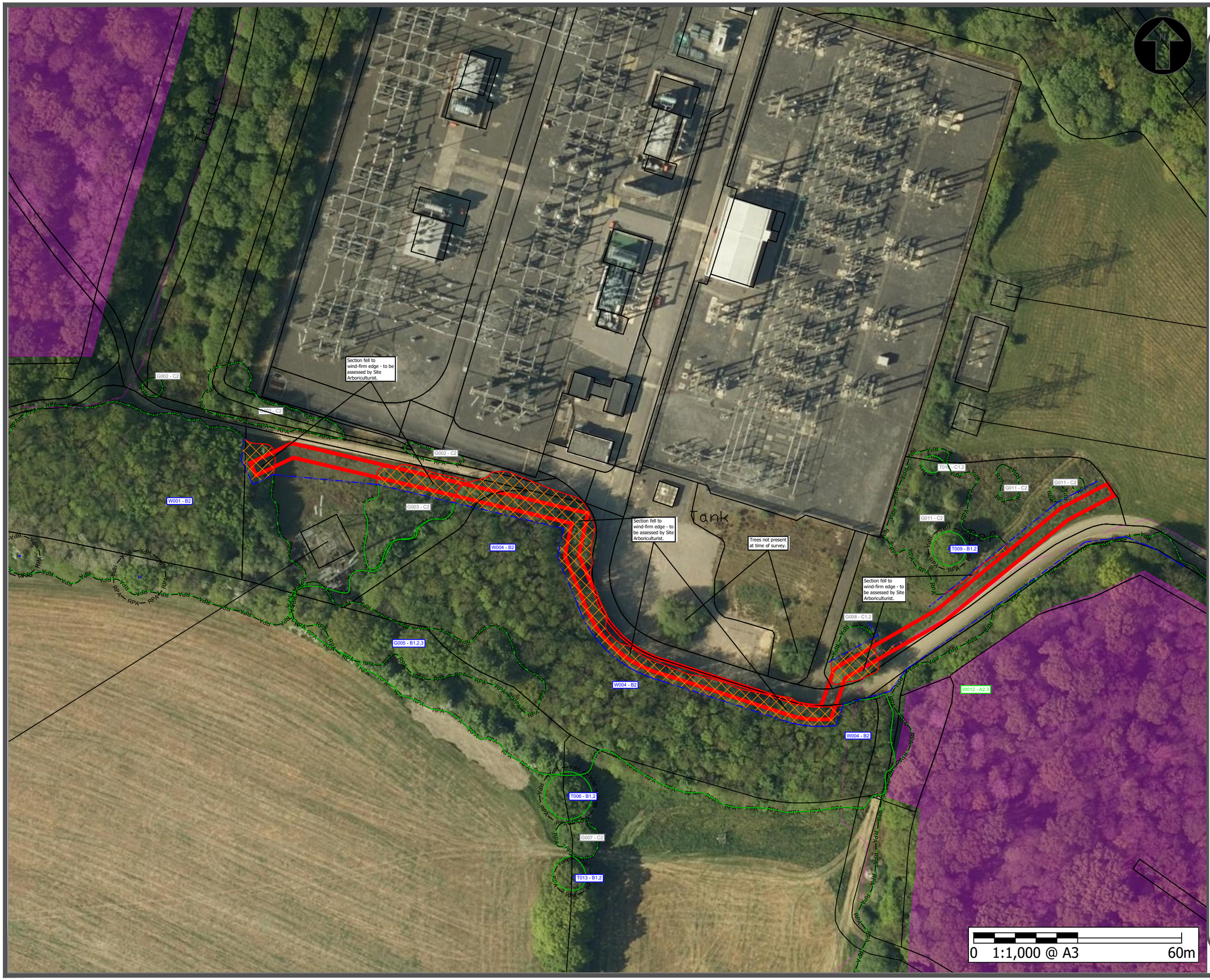

Tree Protection Plan - Overview

Minety Substation

Drawing Key

RPA — Root Protection Area (RPA) as defined by BS5837:2012

RPA Incursion - Development Works.

Retained tree (T), group (G), and hedge (H).

Removed tree feature.

TPF — Tree Protection Fencing. To be maintained as construction exclusion zones.

Ancient semi natural woodland and 15m buffer zone.

Proposed Development - Excavation works boundary.

Site Overview



General Notes

-- Tree categorisation as per BS5837:2012.
-- Tree positions based on publicly available aerial photography. The positions of trees must be considered as indicative only.
-- The original of this drawing was produced in colour. A monochrome copy should not be relied upon.

No.	Revision/Issue	Date
01	Issue	21.06.2023

Longleaf
Tree and Woodland Consultancy
6a Mill Field Road, Cottingley Business Park, Bingley, West Yorkshire, BD16 1PY.

Site Address:
Minety Substation, Malmesbury, SN16 9DX

Project	Sheet
Minety Substation	00/02
Date: June 2023	
Scale: 1:1000 @ A3	

Section fell to wind-firm edge - to be assessed by Site Arboriculturist.

G002 - C2

G002 - C2

G003 - C2

W004 - B2

G005 - B1,2,3

W004 - B2

Tank

Section fell to wind-firm edge - to be assessed by Site Arboriculturist.

Trees not present at time of survey.

0 1:500 @ A3 30m

Tree Protection Plan

Minety Substation

Drawing Key

RPA — Root Protection Area (RPA) as defined by BS5837:2012

RPA Incursion - Development Works.

Retained tree (T), group (G), and hedge (H).

Removed tree feature.

TPF — Tree Protection Fencing. To be maintained as construction exclusion zones.

Ancient semi natural woodland and 15m buffer zone.

Proposed Development - Excavation works boundary.

Site Overview



General Notes

-- Tree categorisation as per BS5837:2012.
-- Tree positions based on publicly available aerial photography. The positions of trees must be considered as indicative only.
-- The original of this drawing was produced in colour. A monochrome copy should not be relied upon.

No.	Revision/Issue	Date
01	Issue	21.06.2023

Longleaf
Tree and Woodland Consultancy
6a Mill Field Road, Cottingley Business Park, Bingley, West Yorkshire, BD16 1PY.

Site Address:
Minety Substation, Malmesbury, SN16 9DX

Project: Minety Substation	Sheet: 01/02
Date: June 2023	
Scale: 1:500 @ A3	

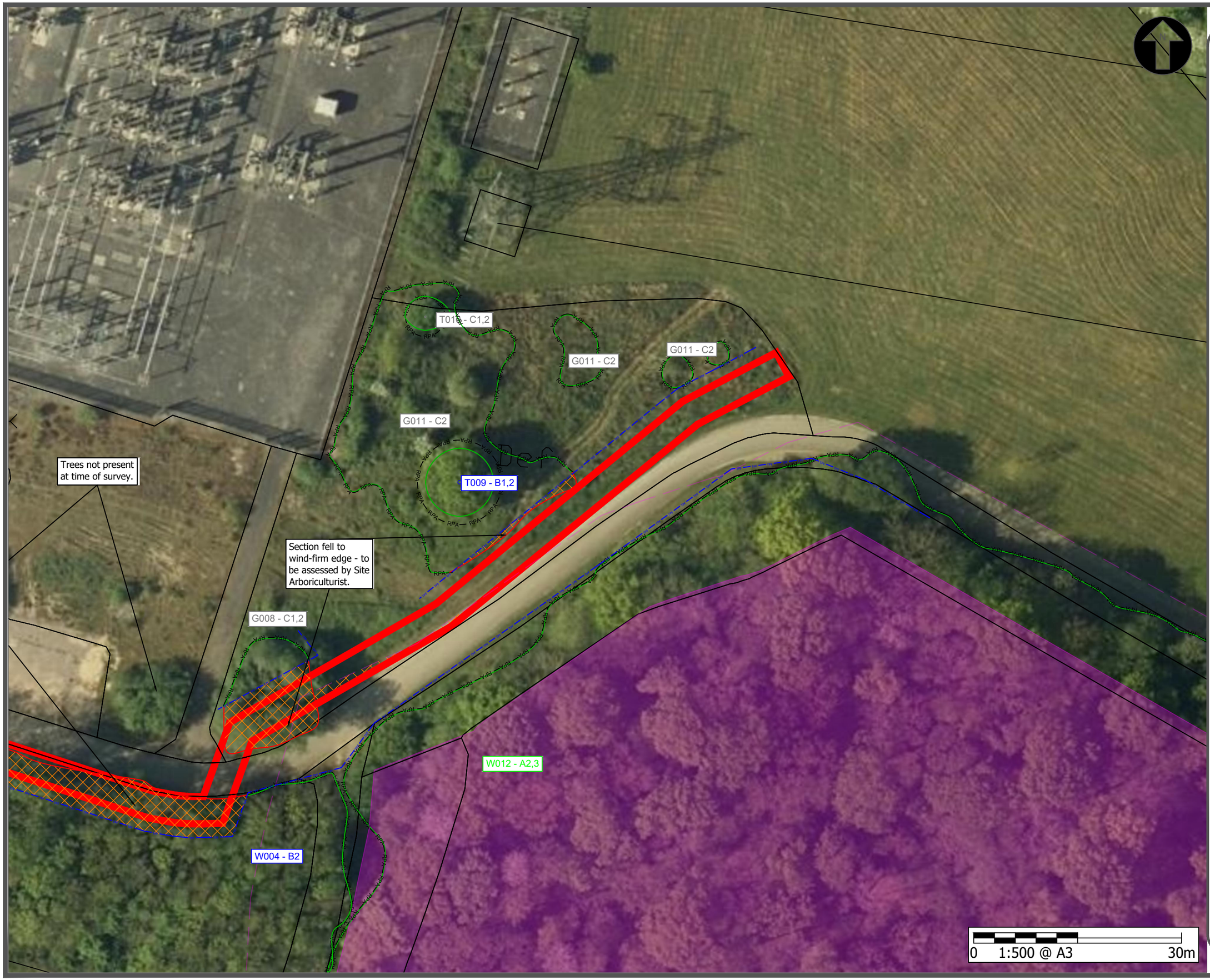

Tree Protection Plan

Minety Substation

Drawing Key

- Root Protection Area (RPA) as defined by BS5837:2012
- RPA Incursion - Development Works.
- Retained tree (T), group (G), and hedge (H).
- Removed tree feature.
- TPF — Tree Protection Fencing. To be maintained as construction exclusion zones.
- Ancient semi natural woodland and 15m buffer zone.
- Proposed Development - Excavation works boundary.

Site Overview



General Notes

- Tree categorisation as per BS5837:2012.
- Tree positions based on publicly available aerial photography. The positions of trees must be considered as indicative only.
- The original of this drawing was produced in colour. A monochrome copy should not be relied upon.

No.	Revision/Issue	Date
01	Issue	21.06.2023

Longleaf
Tree and Woodland Consultancy
6a Mill Field Road, Cottingley Business Park, Bingley, West Yorkshire, BD16 1PY.

Site Address:
Minety Substation, Malmesbury, SN16 9DX

Project: Minety Substation	Sheet: 02/02
Date: June 2023	
Scale: 1:500 @ A3	

Appendix D Proposed Development

Q:\2701-2750\2703-01 Minety Battery Storage\Dwgs\CAD\Grid Connection\2703-01-17 Statutory Plan.dwg

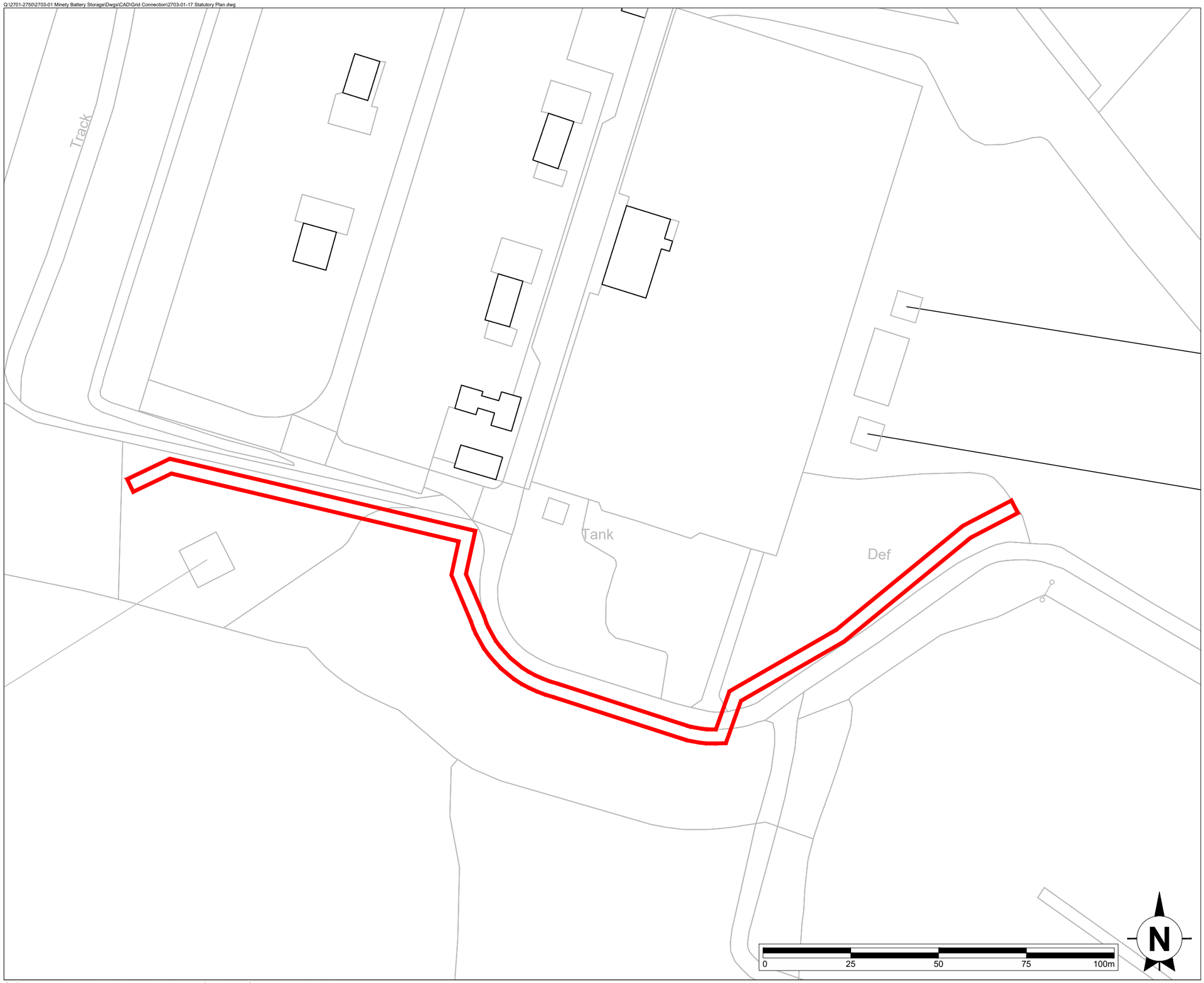

This drawing is the copyright of AXIS P.E.D Limited and may not be loaned, copied or reproduced in any way -or used for any offer, quote, tender or construction purposes without written consent of the company to do so

Follow any figured dimensions - do not scale for construction purposes. IF IN DOUBT ASK.

• Revision History	• Date

Application Boundary
1325m²

Chester Office:
Well House Barns
Bretton
Chester
CH4 0DH

South Manchester Office:
Camellia House
76 Water Lane
Wilmslow
SK9 5BB

0844 8700 007 - www.axisped.co.uk

axis

client: PELAGIC ENERGY

project: MINETY BSF GRID CONNECTION

drawing title: STATUTORY PLAN

date: MAY 2023	drawn by: SK	checked: JM
drawing number: 2703-01-17	status: --	
scale(s): 1:1000@A3	rev:	

planning environment design

© Crown copyright and database rights 2020 Ordnance Survey 0100031673

Appendix E Tree Protection Fencing Signage



Appendix F References

David Lonsdale. (2013). Ancient and other veteran trees: further guidance on management. Available at: https://ancienttreeforum.co.uk/wp-content/uploads/2015/02/ATF_book.pdf

Department for Environment, Food and Rural Affairs (DEFRA). (2009). Construction Code of Practice for the Sustainable Use of Soils on Construction Sites. Available online at: https://assets.publishing.service.gov.uk/government/uploads/system/uploads/attachment_data/file/716510/pb13298-code-of-practice-090910.pdf

Martin Dobson. (1995). Tree Root Systems. Arboricultural Research and Information Note.

Natural England and Forestry Commission. (2022). Ancient woodland, ancient trees and veteran trees: advice for making planning decisions.

NHBC. (2023). NHBC Standards 2023, 4.2 Building near trees.

Peter Crow. (2005). The Influence of Soils and Species on Tree Root Depth. Forestry Commission. Information note.

The British Standards Institution (BSI). (1992). Nursery stock — Part 1: Specification for trees and shrubs (BS 3936-1:1992).

The British Standards Institution (BSI). (2010). Recommendations for Tree Work (BS3998: 2010).

The British Standards Institution (BSI). (2012). Trees in relation to design, demolition and construction -Recommendations (BS5837:2012).

The British Standards Institution (BSI). (2014). Trees: from nursery to independence in the landscape – Recommendations (BS8545:2014).

The British Standards Institution (BSI). (2015). Specification for topsoil. (BS3882:2015).