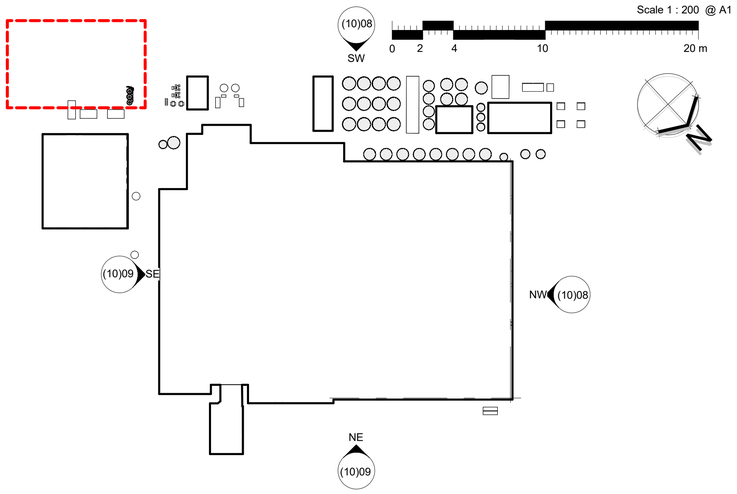

1 00-Elevations Key
1 : 1000

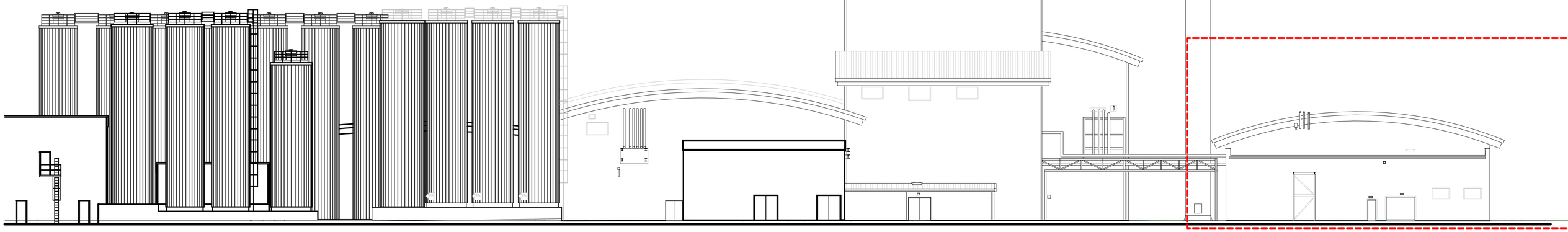

SW South-West Elevation
1 : 200

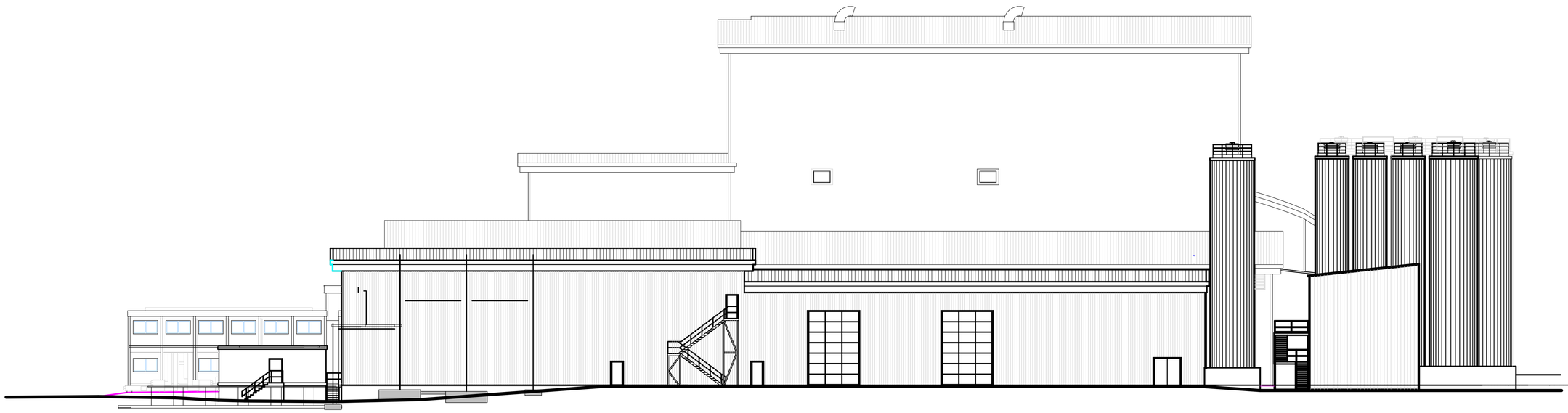

NW North-West Elevation
1 : 200

All existing information on this drawing is taken from information DLG received from third parties and all proposed information is directly based on this received information. It is the contractors responsibility to check accuracy & all dimensions prior to procurement of any materials and the undertaking of any site works! DLG architects take no responsibility for inaccuracies & deficiencies in this information.

This drawing and CAD data therein is protected by copyright and must is protected by copyright and must without the written consent of DLG Architects LLP. ©

No dimensions are to be scaled from this drawing. Use figured dimensions only. All dimensions and sizes are to be checked on site and any discrepancies reported to the architect prior to initiation of any works.

REV	DESCRIPTION	INITIALS/DATE
A	General notes added. 'Planning' status assigned.	LM 19.05.2023
B	Plans updated to suit new current site plan supplied by client	JF 08.06.2023
C	Silo app area dashed line added.	LM 21.07.2023

JOB NAME
ARLA
WESTBURY DAIRY
1 STEPHENSON ROAD,
WESTBURY. BA13 4WF.

DRAWING TITLE
EXISTING ELEVATIONS 1

STATUS
PLANNING

SCALE @ SIZE
1:200 @ A1

DATE
JUNE 23

SHEET BY
JF

CHECKED BY
DB

JOB NO.
4478

DRAWING NO.
DLG-B01-A-DR-A-(10)08

REV
C

DLG ARCHITECTS

LEEDS
One Brewery Wharf
Waterloo Street
Leeds
LS10 1GX

+44(0)113 247 1222
leeds@dlgarchitects.com

LONDON
Studio 12.0G.1
The Leather Market
11 - 13 Weston Street
London
SE1 3ER

+44(0)207 620 1236
london@dlgarchitects.com

dlgarchitects.com