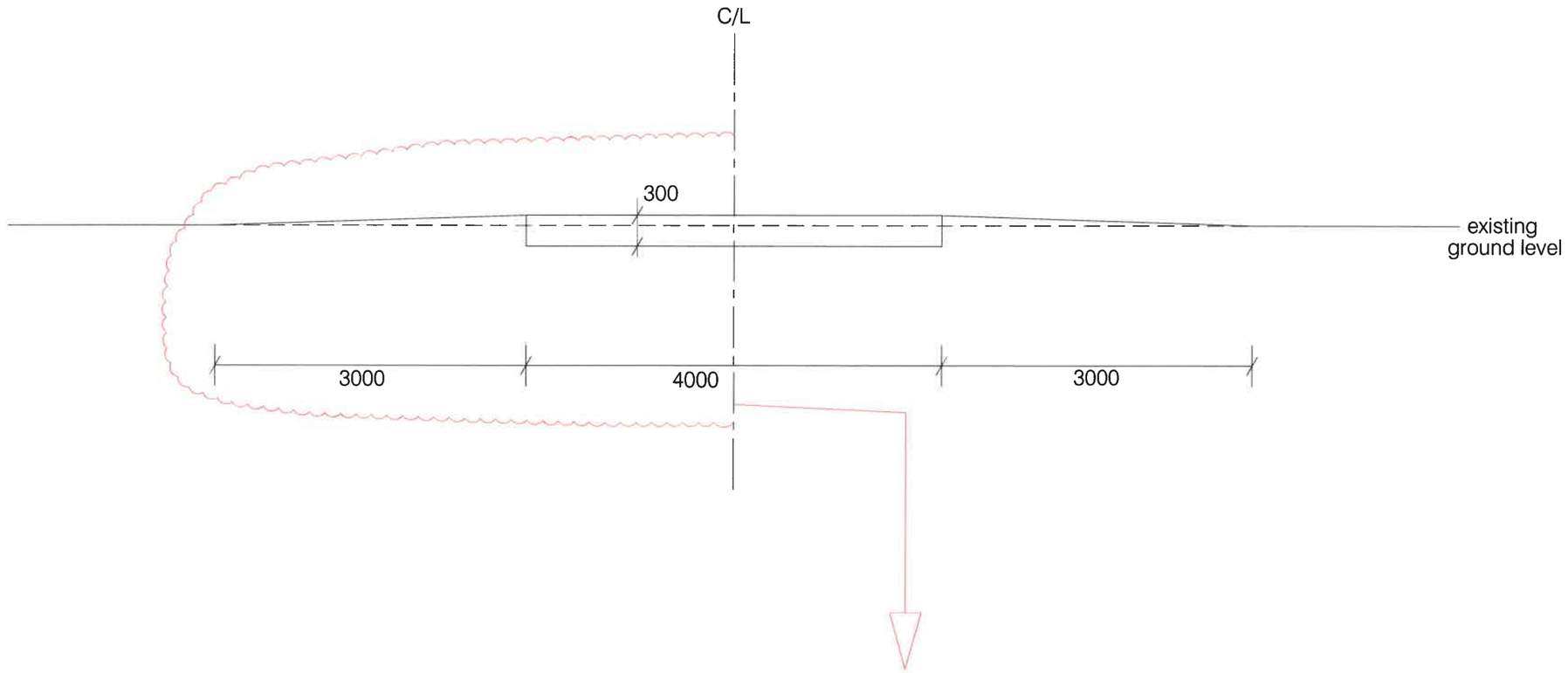

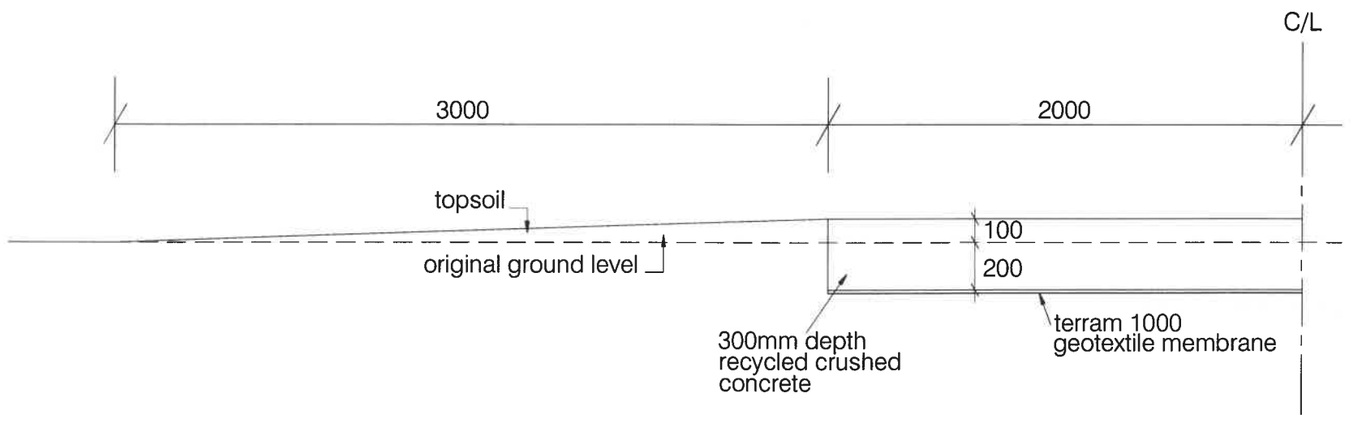

Project: New Agricultural & Forestry
Track at Ram View (SN8 2HW)

Scale: 1 : 50
1 : 25 @ A3