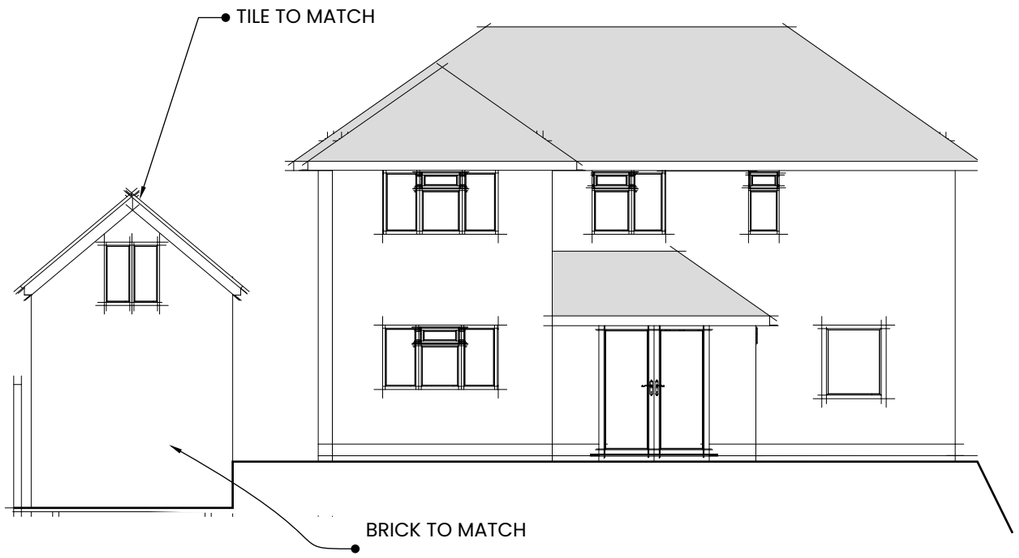

PROPOSED NORTH ELEVATION

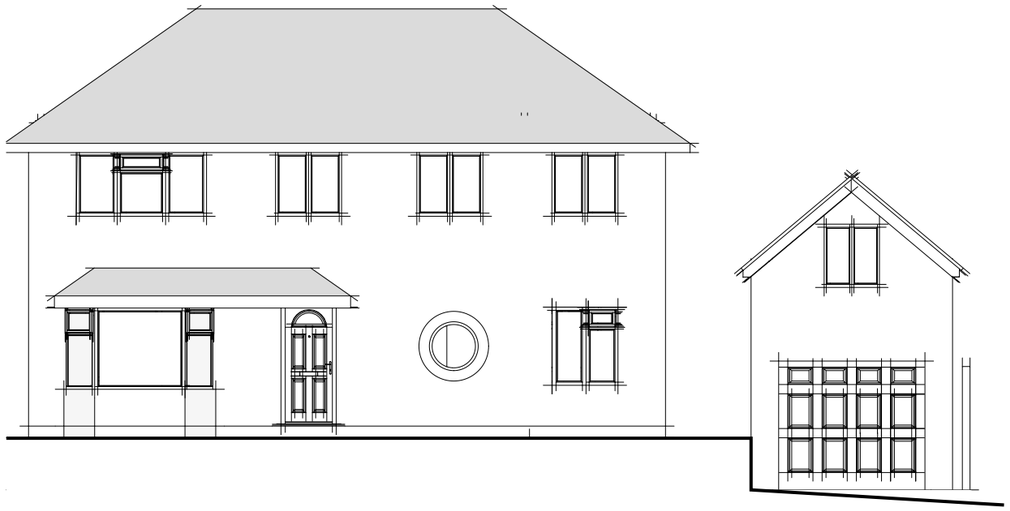

PROPOSED SOUTH ELEVATION

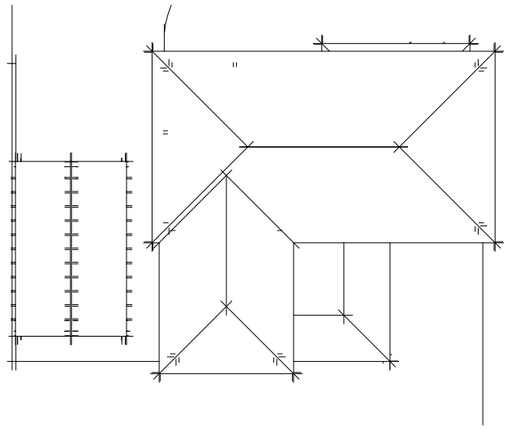

ROOF PLAN 1:200

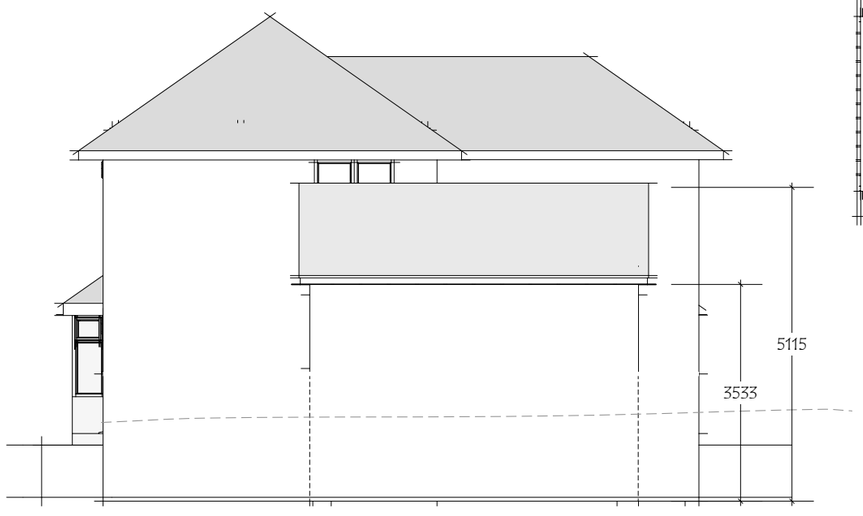

PROPOSED EAST ELEVATION

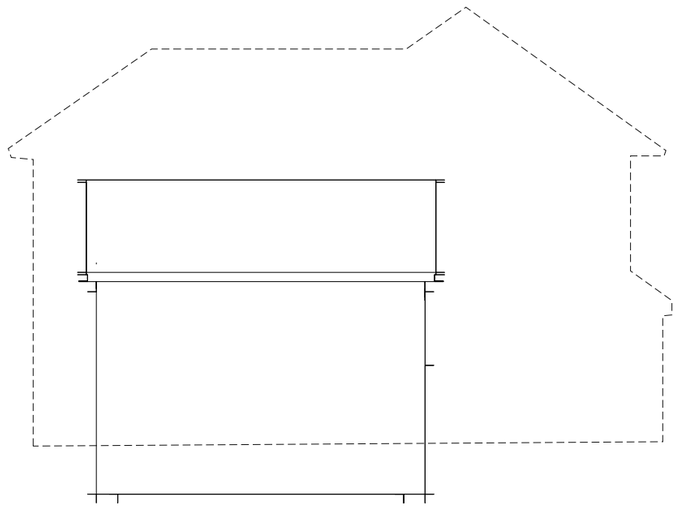

PROPOSED WEST ELEVATION

The Proposal is to demolish the existing concrete panel garage and remove asbestos from roof to an accredited waste site.
On same foot print construct garage with extended height loft roof for Storage use, access will be through garage via a loft hatch.

Scale 1:100

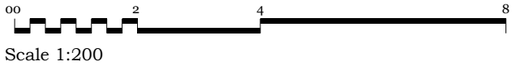

Scale 1:200



gdgplan@btinternet.com

Mr Mrs Hacker
25 Thistlebarrow road
Salisbury
SP1 3RT

Project
GARAGE REPLACEMENT
WITH LOFT STORE ROOM

Drawing Title
Proposed Elevations

Drawing Detail
Scale @ A3 - 1:100 1:200
Drawing No JH-PE-01
Drawn by GG

Date 10/08/2023

Contact G Greenwood
m.0748 3873 045
gdgplan@btinternet.com