AFFINITY
STRUCTURES



Structural Calculation Report
related to the
Assessment of the Existing Rear Extension
at
Hatt House, Old Jockey, Box

Paul Mills trading as
AFFINITY STRUCTURES
Effective Engineering Solutions

Tel. 07932 901767
paul@affinitystructures.co.uk
www.affinitystructures.co.uk

PROJECT DETAILS

Title: Structural Calculation Report related to the Assessment of the Existing Rear Extension at Hatt House, Old Jockey, Box

Our Ref: 1306PL	**File Ref:** HHB-AFS-XX-XX-CA-S-0002
Date: 28/02/2023	**Status:** S4 – Client and Listed Building Approval
Rev: P01	**Issued by:** PM

Status Key: S0 – Work In Progress | S1 – Co-ordination | S2 – Information | S3 – Comment | S4 – Approval RIBA Stage 2, 3, 4, Client, Planning, Building Regulations | D1 – Costing | D2 - Tender | A - Construction | CR - Construction Record

CONTENTS

See Page 3 for detailed contents

APPROVAL

Prepared by:	Reviewed by:	Approved by:
[redacted]	[redacted]	[redacted]
Paul Mills	Paul Mills	Paul Mills

REVISION HISTORY

Rev: P01	Comment: First Issue	Approved by: Paul Mills
Rev:	Comment:	Approved by:

INSTRUCTION AND WARRANTY

AFFINITY STRUCTURES has prepared these Calculations in accordance with the instruction given by Daniel Prosser of DNP Architecture on behalf of the Mr Brian Lobo and Ms. Rebecca Hill ("The Client").

These "Calculations" are for the sole and specific use of the client and AFFINITY STRUCTURES shall not be responsible for any use of the contents for any purpose other than that for which it was prepared and provided. Should the client require to pass copies of this document in part or full to other parties for information, then no professional liability or warranty shall be extended to other parties by AFFINITY STRUCTURES in this connection without the explicit agreement thereto by AFFINITY STRUCTURES.

Table of Contents

1. DESIGN STATEMENT 4
2. CDM – SIGNIFICANT RESIDUAL RISKS 4
3. DESIGN STANDARDS 5
4. GENERAL NOTES 5
5. MATERIALS SPECS 5
5.1 TIMBER 5
5.2 STEELWORK 6
6. SURVEY SKETCHES (NOT TO SCALE) AND PHOTOS 6
7. PROPOSED SKETCHES (NOT TO SCALE) 13
8. DESIGN LOADS 15
8.1 SUSPENDED FIRST FLOOR 15
9. GENERAL CALCULATION DESIGN NOTES 16
10. ASSESSMENTS FOR THE EXISTING FLOOR JOISTS – EFJA TO C 19
11. ASSESSMENT FOR THE NEW FLOOR JOISTS - NFJD 19
12. ASSESSMENT FOR THE NEW STEEL BEAM - NSB 19
13. ASSESSMENT FOR NSB PADSTONE REQUIREMENTS 19
14. PROPOSED LINTELS TO NEW DOORS – PCLR 21
APPENDIX A – MASTERSERIES DATA AND DESIGN EXTRACTS 22

STRUCTURAL CALCULATION REPORT RELATED TO THE ASSESSMENT OF THE EXISTING REAR EXTENSION AT HATT HOUSE, OLD JOCKEY, BOX

1. DESIGN STATEMENT

We have been requested to produce a structural design assessment of the Rear Extension to the Historic Georgian Listed Building that is Hatt House, Old Jockey, Box, Corsham, SN13 8DH.

The assessment is to be carried out to advise on the current structure and the effect of the proposed alterations to potentially remove internal dividing walls, the roof lantern and add a raised floor area either throughout or partially.

We confirm we visited site on 15th February 2023 to carry out a limited visual structural assessment of the property in relation to these questions. The Survey Sketches and Photos are recorded in Section 6. The Proposed Sketches are recorded in Section 7.

2. CDM – SIGNIFICANT RESIDUAL RISKS

Our service only provides a specification for the structural work required for the project as presented in AFFINITY STRUCTURES project specific calculations, sketches and specifications.

Unfortunately, we are unable to provide 'Principal Designer' duties for this project. This role should be undertaken by the architect or lead designer who will manage the pre-construction phase of the work as required by the Construction Design and Management Regulations 2015. We are however, able to provide additional structural information if requested by the 'Principal Designer'.

AFFINITY STRUCTURES project specific design, as presented through our calculations, sketches and specifications has been produced on the assumption that the client will appoint a suitably qualified competent contractor who is experienced in working in the field of domestic structural alterations and refurbishments in historic Listed Buildings.

All construction activities however involve risk and it is not possible to eliminate these entirely. We consider buildability, maintenance and demolition aspects of a design assuming that the contractor will use methods of construction and procedures which are generally accepted as safe within the industry, when carried out by appropriately qualified personnel.

We do not dictate what these methods or procedures must be as they have to be chosen by the contractor in relation to his own management and construction skills and abilities. We therefore only identify areas that we consider as abnormal hazards and associated risks, where our engineering design or the prevalent site conditions, require an unusual approach or where a design may require special consideration as to how it is built, maintained or demolished.

On that basis we confirm, within the limits of our appointment, we have produced a design which does not introduce any abnormal hazards and associated risks, however the contractor will need to read, understand and action the requirements of all the project documentation, including but not limited to the key highlighted notes contained within this design report and have the experience and knowledge to design the temporary works required to install the new works safely.

3. DESIGN STANDARDS

The structural design will be undertaken in accordance with Eurocode Design Standards and it has been assumed that all construction work will be undertaken to Execution Class EXC2 and that all products will be CE/UKCA Marked in accordance with current legislation.

Where no specific guidance is given within the Eurocodes, the design guidance in the British Standards, Building Regulations and NHBC, Premier Guarantee, etc. insurance will be used and referenced as necessary.

4. GENERAL NOTES

- Until technical approval has been obtained from the relevant Authorities it should be understood that all AFFINITY STRUCTURES sketches and specifications issued are preliminary and NOT for construction. Should the contractor start site work prior to approval been given, it is entirely at his own risk.
- Should there be any discrepancies between details indicated in AFFINITY STRUCTURES sketches and specifications and those indicated on other drawings or conditions found on site the Engineer should be informed PRIOR to construction on site.
- All temporary works requirements are the responsibility of the contractor and are to be assessed on site by the contractor and agreed with the Building Control Inspector. The Engineer should be informed of any concerns PRIOR to construction on site.
- It is assumed that the work will be carried out and supervised by experienced, competent persons and that exhaustive detailing is not required.
- AFFINITY STRUCTURES sketches and specifications are project specific and are not to be used and shall not be copied in whole or in part without the written permission of AFFINITY STRUCTURES.
- All lengths should be taken from site dimensions and then have the bearing lengths added. You should NOT use the dimensions in these calculations.

5. MATERIALS SPECS

5.1 Timber

- All softwood timber to be Grade C24 in accordance with BS EN 14081 unless noted
- All timber to be sourced from a sustainable source accredited by the FSC
- All timber to be positively fixed to ensure load transfer and overall stability. Where proprietary metal hangers are used these are to be installed and fully nailed or bolted up in accordance with the manufactures guidelines to achieve the maximum available working capacity.

5.2 Steelwork

- All internal steelwork to be Grade S355 JR in accordance with BS EN 10025
- All internal steelwork to be protected with two coats of zinc phosphate primer
- All steelwork elements to be fabricated to a required CE/UKCA Marking Execution Class of EXC2 to BS EN 1090-2.
- All steel beams will need to be boxed in with pink 1/2hr fire rated plasterboard to the Building Regulations officers approval.

6. SURVEY SKETCHES (Not to scale) AND PHOTOS

Survey sketches marked up on Building Survey Plans:

Extension Floor Beams, SW timber, all assumed Grade C24:
EFBA - Exposed and recorded as 160Dp*75Wd
EFBB - Exposed and recorded as 160Dp*75Wd

Extension Floor Joists, SW timber, all assumed Grade C24:
EFJA - 3 No. exposed and recorded as 185*60 @450c/c's
EFJB - 4 No. exposed and recorded as 130*100 @500c/c's
EFJC - Not Exposed

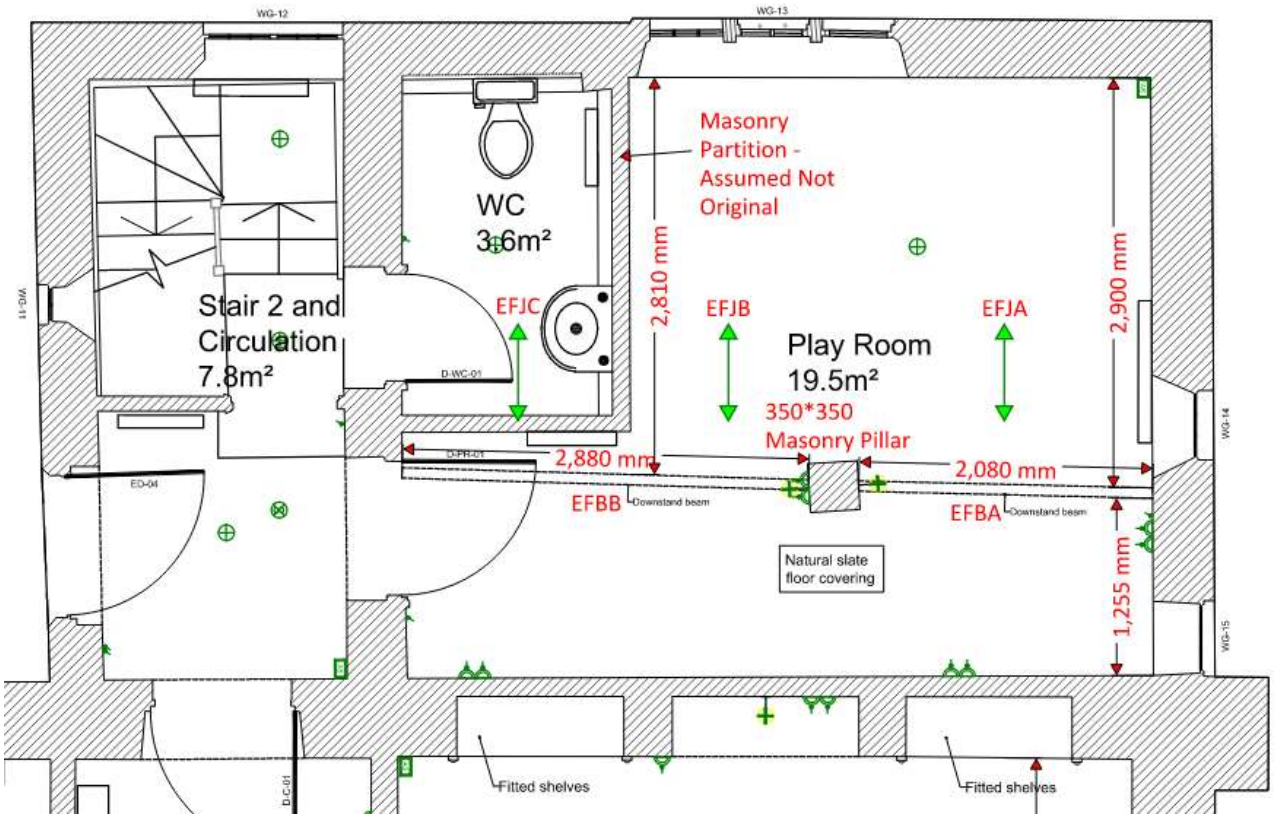

Existing Ground Floor Plan - Showing Structure Over

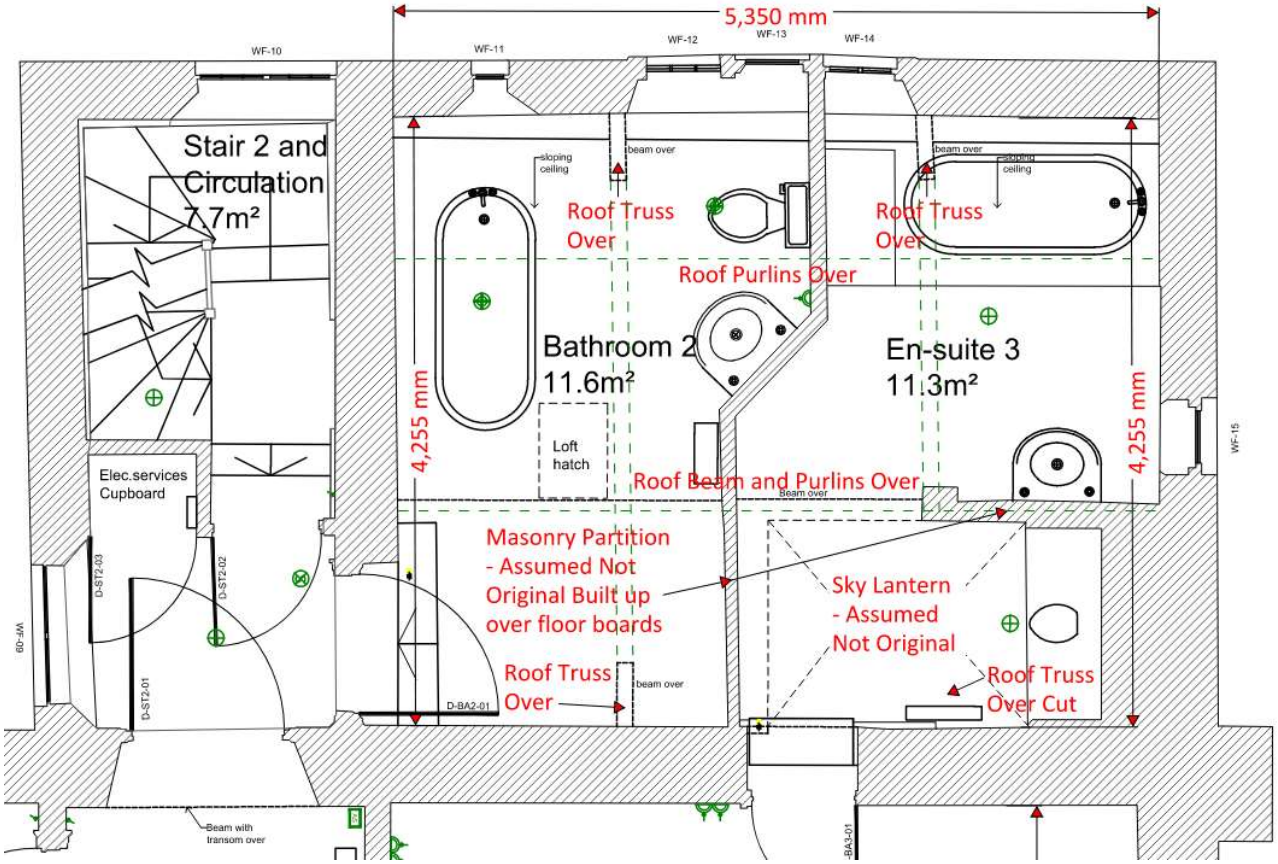

Existing First Floor Plan - Showing Structure Over

Ground Floor - showing brick pillar and downstand beam that are proposed to be removed:





First Floor Left Hand Side Bathroom - showing both ends of the roof trusses and the existing step in the floor between the main house and this area:





First Floor Right Hand Side Bathroom:















Roof Void above the First Floor Left Hand Side Bathroom:











7. PROPOSED SKETCHES (Not to scale)

Refer to the specification notes in Sections 4 and 5 and the notes highlighted in bold in the following calculations Sections 10-14 for further construction information and details.

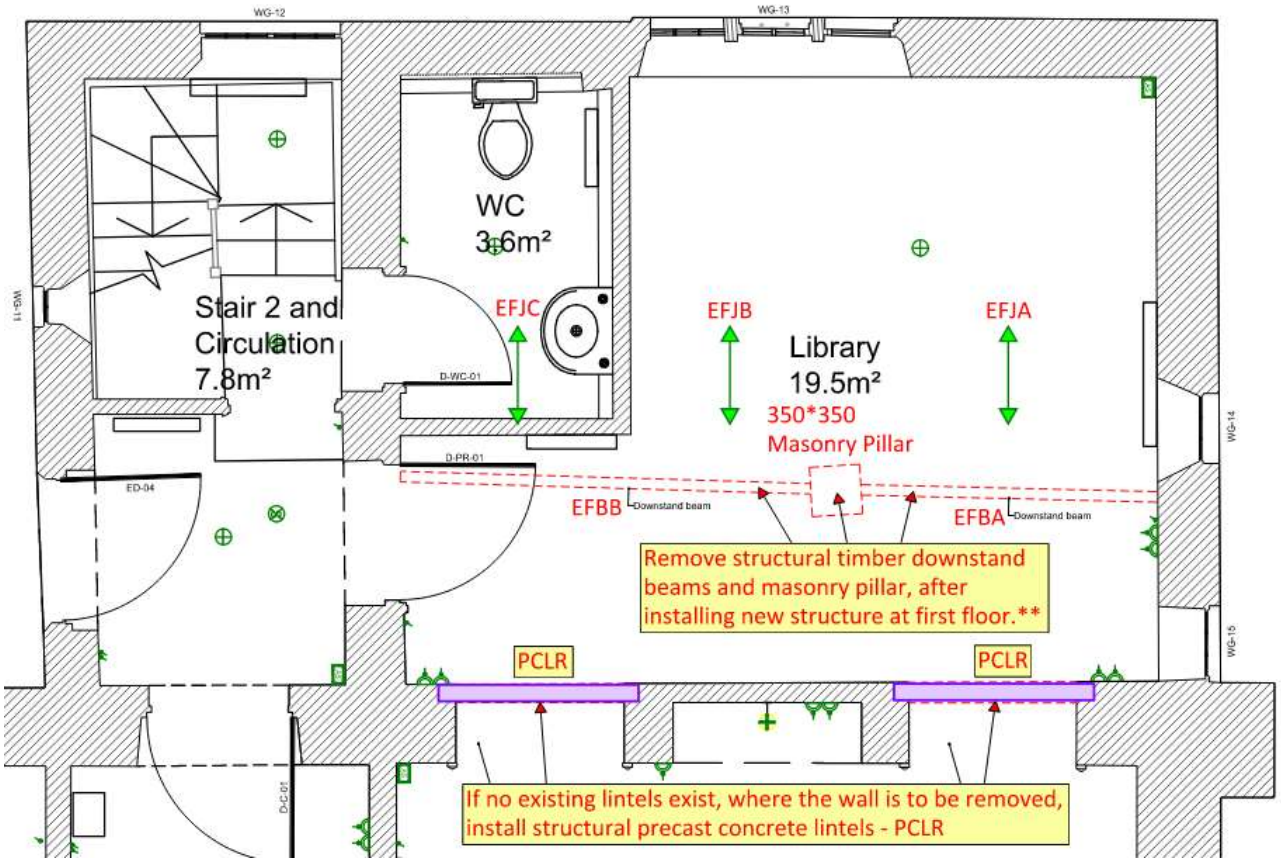

Proposed Ground Floor Plan - Showing Structure Over

** It is apparent that the existing first floor joists, EFJA to C, are under sized, to span the clear distance of 4.255m, from the external wall to the main internal wall, without the existing downstand timber beams and masonry pillar to support them.

This is particularly the case with the existing masonry first floor partitions in place, that also support the roof but even with the roof returned to its original state and the existing masonry first floor partitions removed, the floor joists are still too small to span the 4.255m clear.

Therefore, in order to remove the existing downstand timber beams and masonry pillar, the existing floor joists will need to be supported by a new clear span steel beam.

By placing this beam above the existing floor, as shown by the following detail, a flat soffit at ground floor can be achieved and a reduction in the step height from the adjoining room and landing can also be achieved.

This new beam needs to be installed prior to the removal of the downstand timber beams and masonry pillar at ground floor.

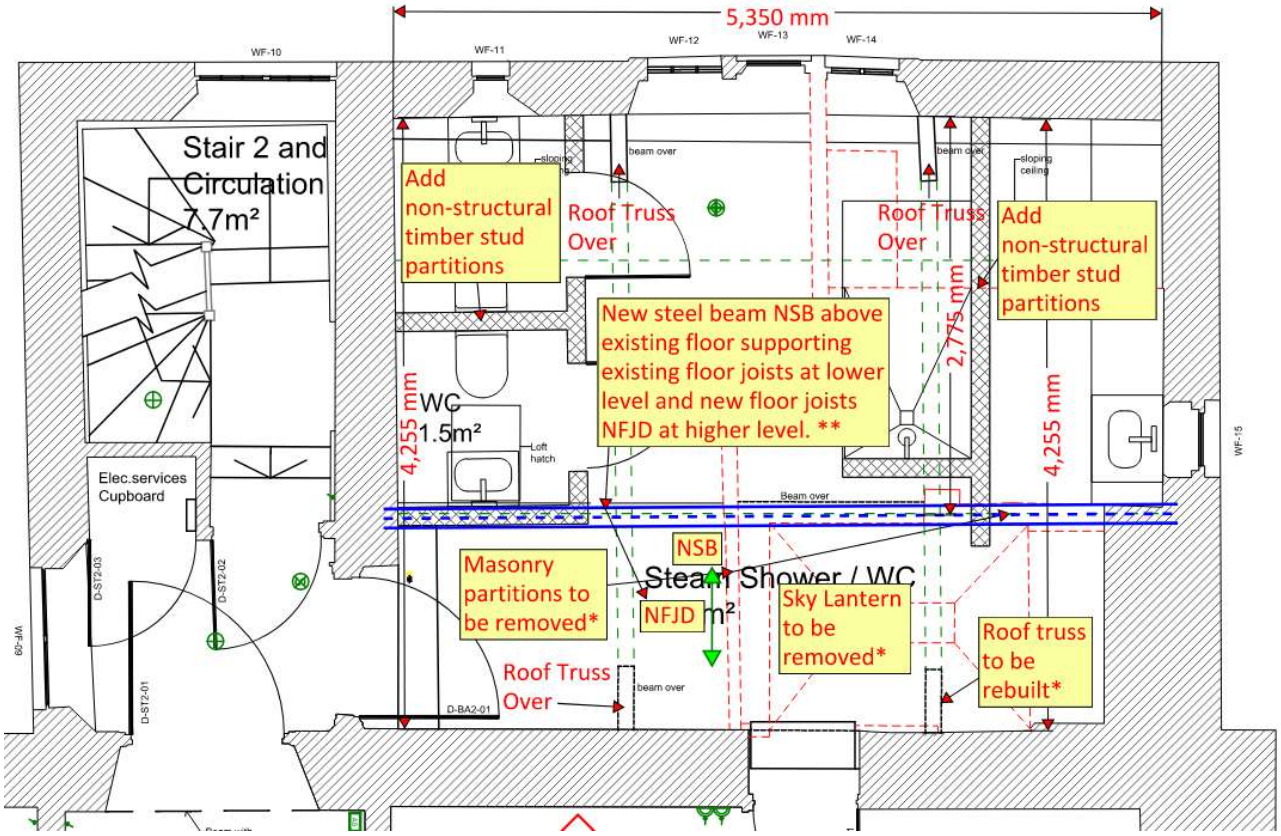

Proposed First Floor Plan - Showing Structure Over

*In order to remove the, assumed later additions, of the first floor masonry partitions and the sky lantern, the original Roof Truss, that has been cut over En-suite Bathroom 3, will need to be rebuilt in its original form, to match the existing truss over Bathroom 2, by a suitably experienced traditional oak truss carpenter.

In its current form it must be assumed that the first floor partitions support the original roof purlins where the truss has been cut. The sky lantern removal and truss reinstatement therefore need to be done prior to the removal of these first floor walls.

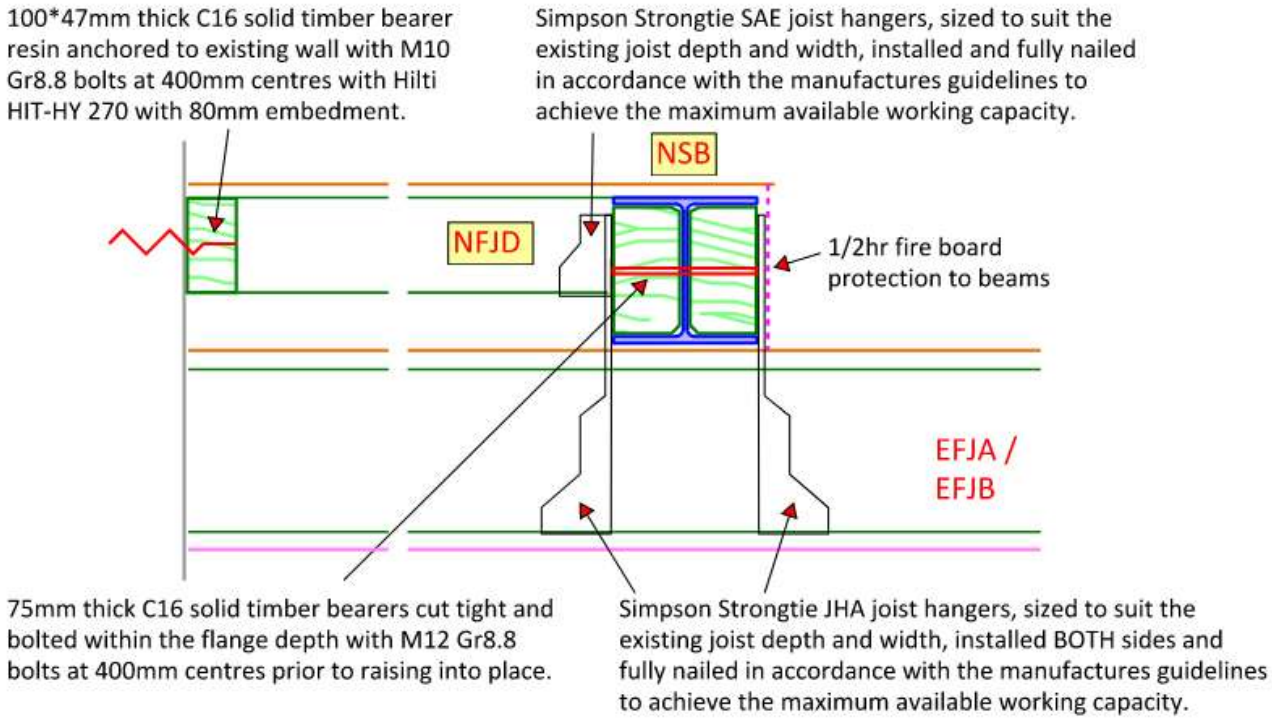

SECTION THROUGH NEW STEEL FLOOR BEAM SUPPORT
SHOWING EXISTING AND NEW FLOOR JOIST CONNECTIONS

8. DESIGN LOADS

8.1 Suspended First Floor

- Permanent loads

  Lower Bathroom Floor
  Floating floor / Tile finishes 0.25, Floor boards 0.15, Timber joists – auto included in model, Ceiling Plasterboard, skim & light services 0.20
  Total on plan without partitions = 0.60kN/m² on plan
  Total on plan with lightweight partitions to form cubicle areas = 1.10kN/m² on plan

  Proposed New Bathroom Floor over existing
  Floating floor / Tile finishes 0.25, Floor boards 0.15, Timber joists – auto included in model
  Total on plan without partitions = 0.40kN/m² on plan

  Existing Bathroom Floor below new floor
  Floor boards 0.15, Timber joists – auto included in model, Ceiling Plasterboard, skim & light services 0.20
  Total on plan without partitions = 0.35kN/m² on plan

- Variable loads

  Medium-term domestic imposed load = 1.50kN/m² on plan

9. GENERAL CALCULATION DESIGN NOTES

The design checks for the existing and new timber floor joists and the new steel beam will be checked in a combined Masterseries frame model of the floor in order to be able to get accurate load distributions and to make full allowance of all available load paths.

The ultimate load combinations for the individual element models will be applied as Eq 6.10a&b = 1.25*Perm + 1.50*Var, 1.35*Perm + 1.05*Var.

Timber floor joists will be design checked as Service Class 1, with medium-term load durations as noted above & full-term deflection, incl. creep, except for load case 1.35/1.00*Perm only, which will have a permanent-term load duration & full-term deflection, incl. creep check.

The Masterseries assessment will include member self-weight for all items modelled:



2.16.2 Definitions of load duration classes

Load duration classes are defined according to the approximate accumulated duration of characteristic load, as shown in Table 2.2.

Table 2.2 Load duration classes

Class	Definition	Examples from the EC5 NA and EC0
Permanent	More than 10 years	Self-weight
Long-term	6 months to 10 years	Temporary structures Storage loading including loading in lofts Water tanks
Medium-term	1 week to 6 months	Imposed floor loading
Short-term	Less than one week	Snow Maintenance or man loading on roofs

All timber elements have been checked against a deflection limits of span/250 under total loads. The program will check with shear deflection included:

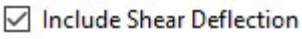

The steel beam has been checked under the following deflection limits:

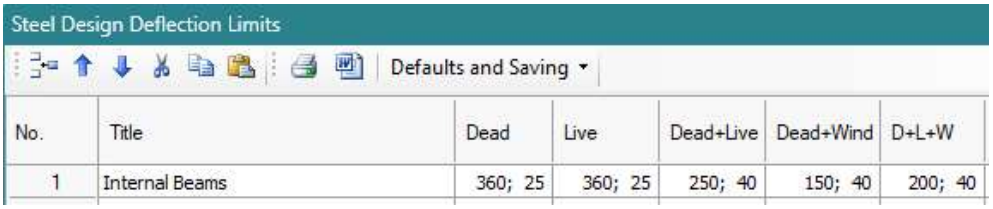

No.	Title	Dead	Live	Dead+Live	Dead+Wind	D+L+W
1	Internal Beams	360; 25	360; 25	250; 40	150; 40	200; 40

If the existing floor members fail these current modern design limits, consideration will be given as to which, if any, design limits the existing floor members pass and whether in the context of the Historic Listed Building these limits can be deemed to be acceptable.

Refer to Sections 10 to 14 for the detailed design reviews.

The following is an image from the Masterseries model showing the members, supports, releases:

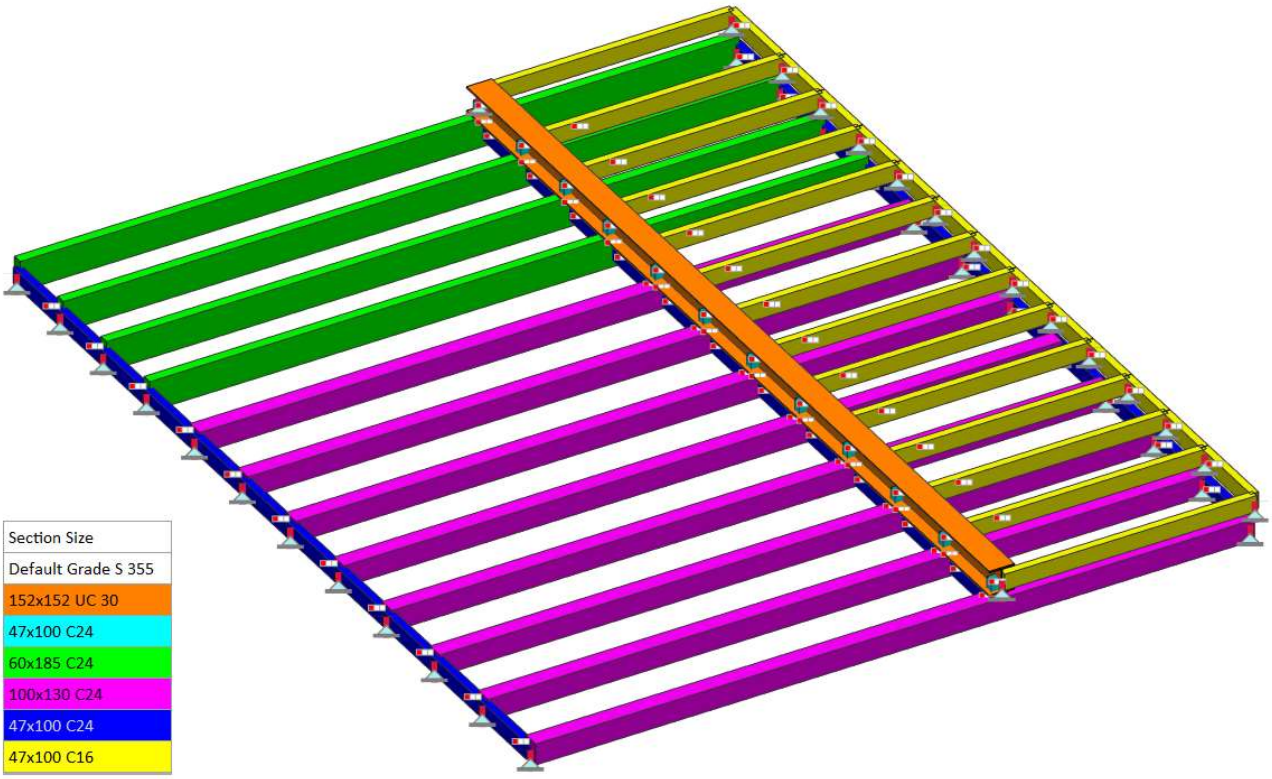

The following is an image from the Masterseries model showing the 3 different loading zones:

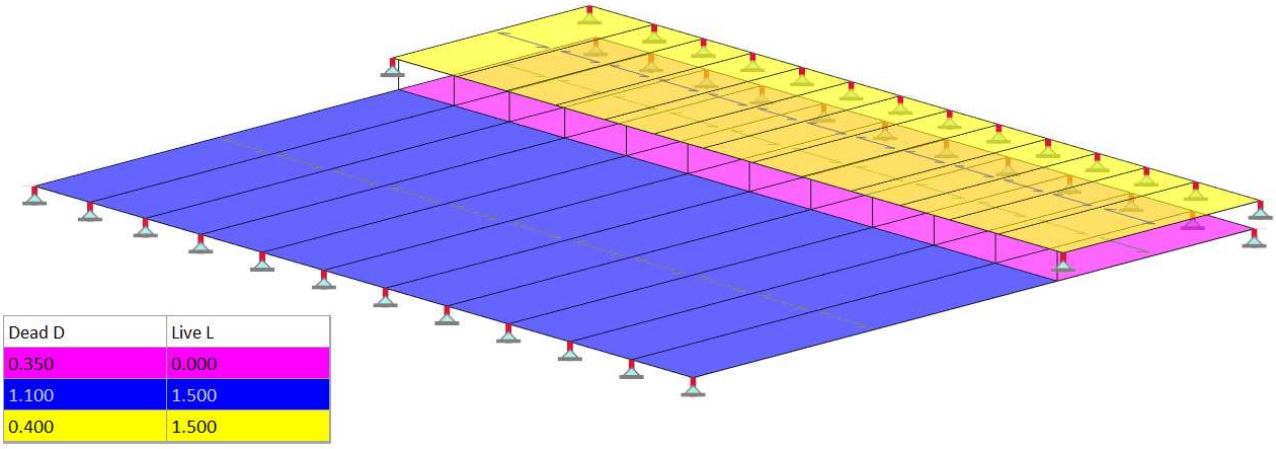

The following is an image from the Masterseries model showing the Moment profile:

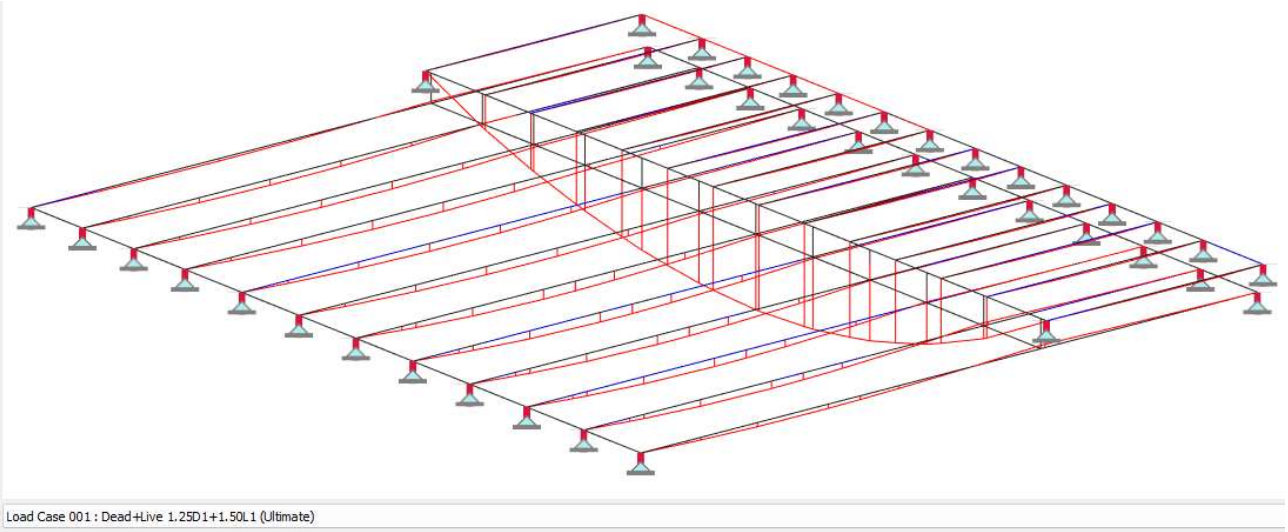

The following is an image from the Masterseries model showing the Deflection profile:

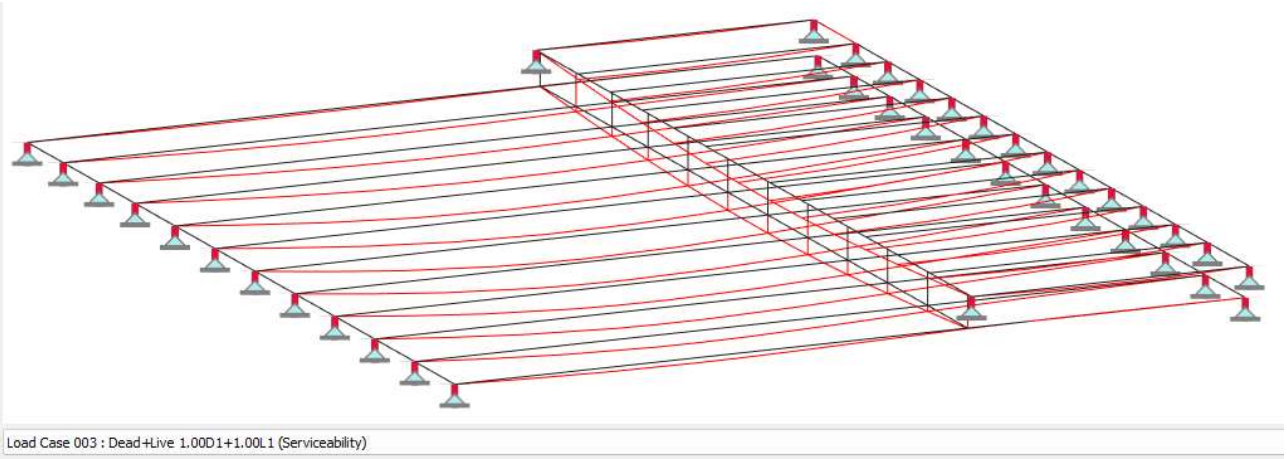

10. ASSESSMENTS FOR THE EXISTING FLOOR JOISTS – EFJA TO C

Refer to Masterseries calculation extracts in Appendix A showing that the Existing EFJA - 185*60 @450c/c's, assumed grade C24 joists, are adequate in strength and deflection for the proposed new situation taking support from NSB above, as opposed to the downstand beam below.

Refer to Masterseries calculation extracts in Appendix A showing that the Existing EFJB - 130*100 @500c/c's, assumed grade C24 joists, are adequate in strength but deflection is slightly higher than the standard span/250 limit for the proposed new situation taking support from NSB above, as opposed to the downstand beam below.

However, when on site the existing floor structure felt sound and solid and as we are both re-supporting all the existing floor joists in approximately the same position as they are currently supported from and we are also reducing the load by removing masonry partitions that also support the roof and replacing them with non-load bearing timber stud partitions we deem by inspection that the existing floor joists slight predicted over-deflection is acceptable and no strengthening works are required.

11. ASSESSMENT FOR THE NEW FLOOR JOISTS - NFJD

Refer to Masterseries calculation extracts in Appendix A showing that the Proposed 100*47 grade C16 joists are adequate in strength and deflection.

12. ASSESSMENT FOR THE NEW STEEL BEAM - NSB

Refer to Masterseries calculation extracts in Appendix A showing that a 152*152 UC 30kg/m S355, steel beam is adequate.

13. ASSESSMENT FOR NSB PADSTONE REQUIREMENTS

A padstone check for NSB has been carried out, assuming 100mm bearing onto existing reasonable quality brickwork, with double sided spread, as recorded below and this found that a single Class B Engineering Brick padstone is required.

Ultimate reaction from Masterseries beam calcs = 23.16kN

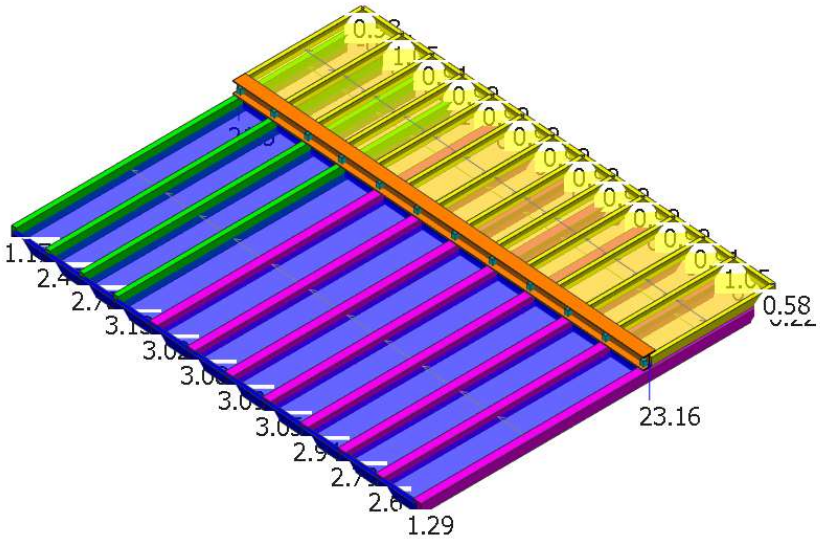

Padstone Calculator

COMPLIES WITH LATEST EUROPEAN DESIGN CODES

Structural calculations for padstones — WORST CASE REACTION FOR 215 PADSTONE

Beam End Reaction = 23.16 kN (factored)

Variable Load Safety Factor = 1.5
Permanent Load Safety Factor = 1.35

Characteristic strength of masonry = 2.8 N/mm² (Brickwork usually = 4.5 N/mm²)
(3.6N Blockwork usually = 2.6 N/mm²)
(A Engineering Brick = 13.2 N/mm²)
(B Engineering Brick = 10.5 N/mm²)
(Weak Brickwork = approx 2.8 N/mm²)
(7.3N Blockwork usually = 4.2 N/mm²)
(10.4N Blockwork usually = 5.4 N/mm²)

Width of beam end bearing = 152 mm
Length of beam end bearing = 100 mm

ym = 3 Assumes Units of Group 1, Category II and Execution Class 2

Bearing Factor = 1.50 Check Min 1.0, Max 1.5, Generally 1.25

Double Sided Spread

a_1 = 800 mm
h_c = 2400 mm
L_{efm} = 1352 mm
A_{ef} = 135200 mm^2

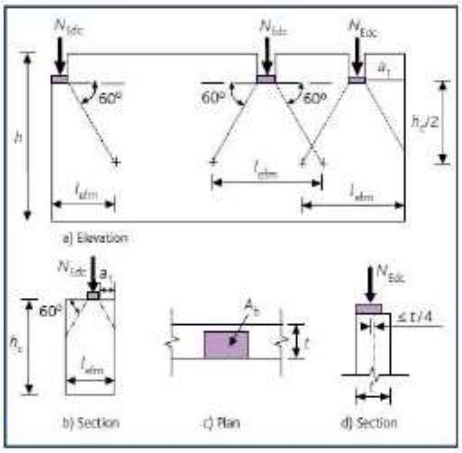

Results

Maximum Bearing Stress = 1.40 N/mm²
Actual Bearing Stress = 1.52 N/mm²

Padstone Required

Padstone Results

Characteristic strength of Padstone = 10.5 N/mm² (A Engineering Brick = 13.2 N/mm²)
(B Engineering Brick = 10.5 N/mm²)
(Concrete C15 = 15 N/mm²)
(Concrete C30 = 30 N/mm²)
(Concrete C40 = 40 N/mm²)
(Steel Plate = 275 N/mm²)

Width of Padstone = 100 mm
Length of Padstone = 215 mm

Allowable padstone stress = 5.25 N/mm²
Stress under beam end bearing = 1.52 N/mm²
Allowable masonry stress = 1.40 N/mm²
Stress under padstone = 1.08 N/mm²

Therefore Padstone Stress OK

Therefore Masonry Stress OK

14. PROPOSED LINTELS TO NEW DOORS – PCLR

Clear Span = 1200mm s/o

A simple conservative assessment of the worst-case load is to compare a udl of 2.2*1.2*1.1/2 from the masonry, assuming a triangular load distribution height but taken as a simple UDL + (0.4+0.35+0.15+.015+1.5)*1.53/2 for the floor = 3.4kN/m to the standard lintel tables.

By inspection using a StressLine R15A 100*140, prestressed precast concrete lintel, 140mm high, 100mm wide, 1500mm long, over the 1200mm s/o, with 150mm bearing – SWL 17.0kN/m, OK

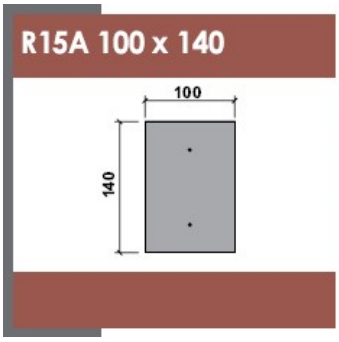

STANDARD LENGTHS (mm)	1050	1200	1350	1500	1650	1800	2100	2400	2700
Clear Span (mm)	750	900	1050	1200	1350	1500	1800	2100	2400
Weight (kg/m)	33.0	33.0	33.0	33.0	33.0	33.0	33.0	33.0	33.0
UDL (kN/m)	40.2*	28.2	21.8	17.0	13.6	11.1	7.8	5.7	4.4
RM (kNm)	3.7	3.7	3.7	3.7	3.7	3.7	3.7	3.7	3.7

*UDL is restricted by shear
Minimum manufactured length is 600mm Maximum manufactured length is 4200mm

There are also many other lintel manufacturers and they will generally be able to provide you with a suitable alternative from their range if you phone their help desk and state the required design span and loading criteria as above.

APPENDIX A – MASTERSERIES DATA AND DESIGN EXTRACTS

AFFINITY STRUCTURES
Soflock f7c01
Pine Lodge
Faringdon
Oxfordshire, SN7 8AU
Tel: 07932 901767

Job Ref : 1306PL
Sheet : New Rear First Floor Fram /
Made by : PM
Date : 28 February 2023 / Ver. 2022.14.08
Checked : PM
Approved : PM

MasterFrame Data File
Loading Cases and Load Combination

Load Group Labels

Load Group UT	Unity Load Factor (All Cases)
Load Group D1	Dead Load
Load Group L1	Live Load

Load Case 001 : Dead+Live 1.25D1+1.50L1 (Ultimate)

Load Combination	+ 1.00 UT + 1.25 D1 + 1.50 L1
Load Duration	Medium Term

Load Case 002 : Dead+Live 1.35D1+1.05L1 (Ultimate)

Load Combination	+ 1.00 UT + 1.35 D1 + 1.05 L1
Load Duration	Medium Term

Load Case 003 : Dead+Live 1.00D1+1.00L1 (Serviceability)

Load Combination	+ 1.00 UT + 1.00 D1 + 1.00 L1
Load Duration	Medium Term

Load Case 004 : Live Only 1.00L1 (Serviceability)

Load Combination	+ 1.00 UT + 1.00 L1
Load Duration	Medium Term

Load Case 005 : Dead Only 1.00D1 (Serviceability)

Load Combination	+ 1.00 UT + 1.00 D1
Load Duration	Permanent

The Nodal Co-ordinates

Node	X (m)	Y (m)	Z (m)	Node	X (m)	Y (m)	Z (m)
1	0.000	0.000	0.050	2	1.530	0.000	0.050
3	0.000	0.000	0.500	4	1.530	0.000	0.500
5	0.000	0.000	0.950	6	4.355	0.000	0.050
7	1.530	0.000	0.950	8	0.000	0.175	0.000
9	1.530	0.175	0.000	10	0.000	0.000	1.400
11	1.530	0.175	0.050	12	4.355	0.000	0.500
13	0.000	0.175	0.525	14	1.530	0.175	0.500
15	1.530	0.000	1.400	16	4.355	0.000	0.950
17	0.000	0.000	1.900	18	1.530	0.175	0.525
19	0.000	0.175	0.925	20	1.530	0.000	1.900
21	1.530	0.175	0.925	22	1.530	0.175	0.950
23	4.355	0.000	1.400	24	0.000	0.175	1.325
25	0.000	0.000	2.400	26	1.530	0.175	1.325
27	1.530	0.175	1.400	28	0.000	0.175	1.725
29	1.530	0.000	2.400	30	4.355	0.000	1.900
31	0.000	0.000	2.900	32	1.530	0.175	1.725
33	1.530	0.175	1.900	34	0.000	0.175	2.125
35	1.530	0.000	2.900	36	4.355	0.000	2.400
37	0.000	0.000	3.400	38	1.530	0.175	2.125
39	0.000	0.175	2.525	40	1.530	0.175	2.400
41	1.530	0.000	3.400	42	4.355	0.000	2.900
43	0.000	0.000	3.900	44	1.530	0.175	2.525
45	0.000	0.175	2.925	46	1.530	0.175	2.900
47	1.530	0.000	3.900	48	1.530	0.175	2.925
49	4.355	0.000	3.400	50	0.000	0.175	3.325
51	0.000	0.000	4.400	52	1.530	0.175	3.325
53	1.530	0.175	3.400	54	0.000	0.175	3.725
55	1.530	0.000	4.400	56	4.355	0.000	3.900
57	0.000	0.000	4.900	58	1.530	0.175	3.725
59	1.530	0.175	3.900	60	0.000	0.175	4.125

Software produced by www.MasterSeries.com © Civil and Structural Computer Services Limited.

AFFINITY STRUCTURES
Soflock f7c01
Pine Lodge
Faringdon
Oxfordshire, SN7 8AU
Tel: 07932 901767

Job Ref : 1306PL
Sheet : New Rear First Floor Fram /
Made by : PM
Date : 28 February 2023 / Ver. 2022.14.08
Checked : PM
Approved : PM

61	1.530	0.000	4.900	62	4.355	0.000	4.400
63	0.000	0.000	5.400	64	1.530	0.175	4.125
65	0.000	0.175	4.525	66	1.530	0.175	4.400
67	1.530	0.000	5.400	68	4.355	0.000	4.900
69	1.530	0.175	4.525	70	0.000	0.175	4.925
71	1.530	0.175	4.900	72	1.530	0.175	4.925
73	4.355	0.000	5.400	74	0.000	0.175	5.450
75	1.530	0.175	5.400	76	1.530	0.175	5.450

Member Properties

Members 1-6 & 8-9
M ... ... 60x185 C24 E 6.875E6 G .430E6 TG C24 1001100
A 111.0E-4 Iy 3166E-8 Iz 333.0E-8 It 1332E-8

Members 7, 10-11, 14, 17, 20, 23-24, 27, 30, 33, 36-38 & 72-84
M ... ... 47x100 C16 E 5.000E6 G .313E6 TG C16 1001100
A 47.0E-4 Iy 391.7E-8 Iz 86.52E-8 It 346.1E-8

Members 12-13, 15-16, 18-19, 21-22, 25-26, 28-29, 31-32 & 34-35
M ... ... 100x130 C24 E 6.875E6 G .430E6 TG C24 1001100
A 130.0E-4 Iy 1831E-8 Iz 1083E-8 It 4333E-8

Members 39-71
M ... ... 47x100 C24 E 6.875E6 G .430E6 TG C24 1001100
A 47.0E-4 Iy 391.7E-8 Iz 86.52E-8 It 346.1E-8

Members 85-109
M ... ... 152x152 UC 30 [S 355]
A 38.26E-4 Iy 1749E-8 Iz 561.4E-8 It 10.52E-8
E 210.0E6 G 80.77E6

Members 110-121
M ... ... 47x100 C24 E 6.875E6 G .430E6 TG C24 1000100
A 47.0E-4 Iy 391.7E-8 Iz 86.52E-8 It 346.1E-8

Member Loading

Member Self Weight Density Load Included in Load Group D1, defined by Modulus of Elasticity

E kN/mm^2	Density kN/m^3
>= 200.00	77.01
>= 20.00	24.00
>= 2.00	10.00

Member 1 - MasterFrame Pro Loads
D1 UDLY -000.079 (kN/m) D1 D 010.000 (kN/m³)

Member 2 - MasterFrame Pro Loads
D1 UDLY -000.248 (kN/m) L1 UDLY -000.338 (kN/m)
D1 D 010.000 (kN/m³)

Members 3 & 5 - MasterFrame Pro Loads
D1 UDLY -000.158 (kN/m) D1 D 010.000 (kN/m³)

Members 4 & 6 - MasterFrame Pro Loads
D1 UDLY -000.496 (kN/m) L1 UDLY -000.676 (kN/m)
D1 D 010.000 (kN/m³)

Members 7 & 38 - MasterFrame Pro Loads
D1 UDLY -000.105 (kN/m) L1 UDLY -000.394 (kN/m)
D1 D 010.000 (kN/m³)

Member 8 - MasterFrame Pro Loads
D1 UDLY -000.167 (kN/m) D1 D 010.000 (kN/m³)

AFFINITY STRUCTURES
Soflock f7c01
Pine Lodge
Faringdon
Oxfordshire, SN7 8AU
Tel: 07932 901767

Job Ref : **1306PL**
Sheet : **New Rear First Floor Fram /**
Made by : **PM**
Date : **28 February 2023 / Ver. 2022.14.08**
Checked : **PM**
Approved : **PM**

Member 9 - MasterFrame Pro Loads
D1 UDLY -000.523 (kN/m) L1 UDLY -000.713 (kN/m)
D1 D 010.000 (kN/m³)

Members 10 & 37 - MasterFrame Pro Loads
D1 UDLY -000.185 (kN/m) L1 UDLY -000.694 (kN/m)
D1 D 010.000 (kN/m³)

Members 11, 14, 17, 20, 23-24, 27, 30, 33 & 36 - MasterFrame Pro Loads
D1 UDLY -000.160 (kN/m) L1 UDLY -000.600 (kN/m)
D1 D 010.000 (kN/m³)

Members 12 & 15 - MasterFrame Pro Loads
D1 UDLY -000.175 (kN/m) D1 D 010.000 (kN/m³)

Members 13, 16, 19, 22, 26, 29 & 32 - MasterFrame Pro Loads
D1 UDLY -000.550 (kN/m) L1 UDLY -000.750 (kN/m)
D1 D 010.000 (kN/m³)

Members 18, 21, 25, 28 & 31 - MasterFrame Pro Loads
D1 UDLY -000.176 (kN/m) D1 D 010.000 (kN/m³)

Member 34 - MasterFrame Pro Loads
D1 UDLY -000.088 (kN/m) D1 D 010.000 (kN/m³)

Member 35 - MasterFrame Pro Loads
D1 UDLY -000.275 (kN/m) L1 UDLY -000.375 (kN/m)
D1 D 010.000 (kN/m³)

Members 39-84 & 110-121 - MasterFrame Pro Loads
D1 D 010.000 (kN/m³)

Members 85-109 - MasterFrame Pro Loads
D1 D 077.010 (kN/m³)

Members 111-117
UT Tension-Only (No Compression)

Member End Releases

Symbols End 1 torsion-minor-major End 2 torsion-minor-major O Released ® Fixed

10	®®®	®OO	11	®®®	®OO	14	®®®	®OO	17	®®®	®OO
20	®®®	®OO	23	®®®	®OO	24	®®®	®OO	27	®®®	®OO
30	®®®	®OO	33	®®®	®OO	36	®®®	®OO	37	®®®	®OO
39	®OO	®®®	40	®OO	®®®	41	®OO	®®®	42	®OO	®®®
43	®OO	®®®	44	®OO	®®®	45	®OO	®®®	46	®OO	®®®
47	®OO	®®®	48	®OO	®®®	49	®OO	®®®	50	®®®	®OO
51	®®®	®OO	52	®®®	®OO	53	®®®	®OO	54	®®®	®OO
55	®®®	®OO	56	®®®	®OO	57	®®®	®OO	58	®®®	®OO
59	®®®	®OO	60	®®®	®OO	61	®OO	®OO	62	®OO	®OO
63	®OO	®OO	64	®OO	®OO	65	®OO	®OO	66	®OO	®OO
67	®OO	®OO	68	®OO	®OO	69	®OO	®OO	70	®OO	®OO
71	®OO	®OO	72	®OO	®®®	73	®OO	®®®	74	®OO	®®®
75	®OO	®®®	76	®OO	®®®	77	®OO	®®®	78	®OO	®®®
79	®OO	®®®	80	®OO	®®®	81	®OO	®®®	82	®OO	®®®
83	®OO	®®®	84	®OO	®®®	110	®OO	®OO	111	®OO	®OO
112	®OO	®OO	113	®OO	®OO	114	®OO	®OO	115	®OO	®OO
116	®OO	®OO	117	®OO	®OO	118	®OO	®OO	119	®OO	®OO
120	®OO	®OO	121	®OO	®OO						

Software produced by www.MasterSeries.com © Civil and Structural Computer Services Limited.

AFFINITY STRUCTURES
Pine Lodge
Faringdon
Oxfordshire, SN7 8AU
Tel: 07932 901767

Soflock f7c01

Job Ref	**: 1306PL**
Sheet	**: New Rear First Floor Fram /**
Made by	**: PM**
Date	**: 28 February 2023 / Ver. 2022.14.08**
Checked	**: PM**
Approved	**: PM**

Nodal Loading and Support Conditions

NODES 1, 3, 5-6, 8-10, 12-13, 16-17, 19, 23-25, 28, 30-31, 34, 36-37, 39, 42-43, 45, 49-51, 54, 56-57, 60, 62-63, 65, 68, 70, 73-74 & 76

UT Rs 1 1 1 0 1 0 (Pinned with Y Moment Restraint)

Software produced by www.MasterSeries.com © Civil and Structural Computer Services Limited.

AFFINITY STRUCTURES
Pine Lodge
Faringdon
Oxfordshire, SN7 8AU
Tel: 07932 901767

Soflock f7c01

Job Ref : 1306PL
Sheet : New Rear First Floor Fram /
Made by : PM
Date : 28 February 2023 / Ver. 2022.14.08
Checked : PM
Approved : PM

Axial with Moments (Member)
Member SB 1\A-CL1Id 74 @ Level 1 in Load Case 1

Member Loading and Member Forces

Loading Combination : 1 UT + 1.25 D1 + 1.5 L1

D1 D 077.010 (kN/m³)

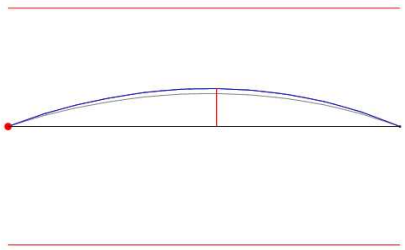

Member Forces in Load Case 1 and Maximum Deflection from Load Case 3										
Level No.	Node End1 End2	Axial Force (kN)	Torque Moment (kN.m)	Shear Force (kN)		Bending Moment (kN.m)		Maximum Moment (kN.m @ m)		Maximum Deflection (mm @ m)
				y-y	z-z	y-y	z-z	y-y	z-z	
1	9	0.00C	0.00	-20.89	0.00	0.00	0.00	-28.22		17.53
	76	0.00C	0.00	22.56	0.00	0.01	0.00	@ 2.900		@ 2.743

Classification and Effective Area (EN 1993: 2006)

Section (30.03 kg/m)	152x152 UC 30 [S 355]		
Class = Fn(b/T,d/t,f_y,N,M_y,M_z)	8.13, 19.02, 355, 0, 28.22, 0	(Axial: Non-Slender)	Class 1
Auto Design Load Cases	1-2		

Shear Capacity Check

$V_{y.Ed}/V_{pl.y.Rd}$	22.555 / 236.822 =	0.095	OK

Moment Capacity Check M.c.y.Rd

$V_{y.Ed}/V_{pl.y.Rd}$	1.565 / 236.822 =	0.007	Low Shear
$M_{c.y.Rd} = f_y.W_{pl.y}/\gamma_{M0}$	355 x 247.7/1	87.934 kN.m	
$M_{y.Ed}/M_{c.y.Rd}$	-28.217 / 87.934 =	0.321	OK

Equivalent Uniform Moment Factor C1

C_1= fn(M_1, M_2, M_o, ψ,μ)	0.0, 0.0, -28.1, 0.576, 300.000	1.127	Uniform

Lateral Buckling Check M.b.Rd

Le = 1.00 L	1 x 5.45 =	5.45 m	
M_{cr}= Fn(C_1,L_e,I_z,I_t,I_w,E)	1.127, 5.450, 561.4, 10.52, 0.03075, 210000	72.764 kN.m	
$\lambda_{LT}= \sqrt{W.f_y/M_{cr}}$	$\sqrt{}$ 247.7 x 355 / 72.764	1.099	
χ_{LT}= Fn(λ_{LT}, ϕ_{LT}, β, λ_{LT0})	1.099, 1.072, 0.750, 0.400	0.639	Curve b
χ_{LT}.mod = Fn(χ_{LT},λ_{LT},k_c,f)	0.639, 1.099, 0.942, 0.976	0.655	6.3.2.3
$M_{b.Rd} = \chi W_{pl.y}.f_y \leq M_{c.y.Rd}$	0.655 x 247.7 x 355 $\leq$ 87.934 =	57.559 kN.m	
$M_{y.Ed}/M_{b.Rd}$	28.225 / 57.559	0.490	OK

Deflection Check - Load Case 3

Deflection Limits (Internal Beams)	In-span $\delta \leq$ 5450/360 = 15.1 mm Dead (Case 5)	8.6 mm	OK
	In-span $\delta \leq$ 5450/360 = 15.1 mm Live (Case 4)	8.93 mm	OK
	In-span $\delta \leq$ 5450/250 = 21.8 mm D+L (Case 3)	17.53 mm	OK

Software produced by www.MasterSeries.com © Civil and Structural Computer Services Limited.

AFFINITY STRUCTURES
Soflock f7c01
Pine Lodge
Faringdon
Oxfordshire, SN7 8AU
Tel: 07932 901767

Job Ref : 1306PL
Sheet : New Rear First Floor Fram /
Made by : PM
Date : 28 February 2023 / Ver. 2022.14.08
Checked : PM
Approved : PM

MasterKey : Timber Design
Axial Load With Moment Design to BS EN 1995-1-1:2004 + A1:2008
Member TB B-A\1L1Id 83 @ Level 1

Summary Design Data

Eurocode National Annex	Using UK values
Strength class code	BS EN 338:2009
Design Cases Covered	1.25 D1 + 1.5 L1, 1.35 D1 + 1.05 L1
Deflection Cases Covered	1.0 D1 + 1.0 L1, 1.0 L1, 1.0 D1
Section Size	b = 47, h = 100, 100x47 in Strength Class C16
Section Properties (cm²,cm³,cm)	Area 47, $W_{el.y}$ 78.3, $W_{el.z}$ 36.8, i_y 2.89, i_z 1.36
Specification	1 : Internal use in continuously heated building Medium Term loading, Calculate final deflection
Integrated Design Critical Case	: Dead+Live 1.25D1+1.50L1 (Ultimate)
Member Details	N_{Ed} = 0.0 kN, L = 1.53 m, L_y = 1.53 m, L_z = 1.53 m, $L_{cr.y}$ = 1.0 L_y, $L_{cr.z}$ = 1.0 L_z Bearing length 50, Distance to Bearing 150 mm

Grade and Admissible Stresses (Strength Class C16)

$f_{m.y.d} = K_{mod}.K_{hy}.K_{sys}.f_{m.k}/\gamma_m$	0.80 x 1.08 x 1.10 x 16.00/1.3	11.75 N/mm²	
$f_{m.z.d} = K_{mod}.K_{hz}.K_{sys}.f_{m.k}/\gamma_m$	0.80 x 1.26 x 1.10 x 16.00/1.3	13.66 N/mm²	
$f_{c.90.d} = K_{mod}.K_{c.90}.K_{sys}.f_{c.90.k}/\gamma_m$	0.80 x 1.50 x 1.10 x 2.20/1.3	2.23 N/mm²	
$f_{v.d} = K_{mod}.K_{sys}.f_{v.k}/\gamma_m$	0.80 x 1.10 x 3.20/1.3	2.17 N/mm²	
$E_{mean.fin} = E_{mean}/(1+K_{def})$	8000/(1+0.60)	5000 N/mm²	Deflection

Axial Load with Moments Check

Critical Design Location	X = 0.765		
$\sigma_{m.y.d} = M_y/W_{el.y}$	0.337 / 78.33 ≤ 11.75	4.30 N/mm²	OK
$U_{m.y} = \sigma_{m.y.d}/f_{m.y.d}$	4.300/11.746	0.366	OK
$U_{m.y}$	0.366	0.366	OK
$L_{eff}=L.K_{LTB}$	1.530x1.000	1.530	
$\sigma_{mcrit}=\pi\sqrt{(E_{05}.I_z.G_{05}.J)/(L_{eff}.W_y)}$	$\pi\sqrt{(5.40x86.52x0.34x244.02)/(1.530x78.33)}$	51.418	
$\lambda_{r,elm}=\sqrt{(f_{mk}/\sigma_{mcrit})}$	$\sqrt{(16.00/51.42)}$	0.558	
k_{Crit}	$\lambda_{r,elm}$ < 0.75	1.000	
$\sigma_{m.y.d}/(k_{Crit}\bullet f_{m.y.d})$	4.300/(1.000x11.746)	0.366	OK

Shear and Bearing Check

Critical Design Location	X = 0.000		
τ_a= 1.5 $V_{y.Ed}$ / Area / k_{cr}	1.5 x 0.888 / 47 / 0.67 ≤ 2.17	0.42 N/mm²	OK
$\sigma_{cax} = V_{y.Ed}$ / (b.I_y)	0.888 / (47 x 50) ≤ 2.23	0.38 N/mm²	OK

Deflection Check

Critical Load Case 003 : Dead+Live 1.00D1+1.00L1 (Serviceability)

$\delta = \delta_m + \delta_s$	In-span 3.12 ≤ L/250	3.12 mm	OK

Software produced by www.MasterSeries.com © Civil and Structural Computer Services Limited.

AFFINITY STRUCTURES
Soflock f7c01
Pine Lodge
Faringdon
Oxfordshire, SN7 8AU
Tel: 07932 901767

Job Ref : 1306PL
Sheet : New Rear First Floor Fram /
Made by : PM
Date : 28 February 2023 / Ver. 2022.14.08
Checked : PM
Approved : PM

MasterKey : Timber Design
Axial Load With Moment Design to BS EN 1995-1-1:2004 + A1:2008
Member TB A\1-3L1Id 16 @ Level 1

Summary Design Data

Eurocode National Annex	Using UK values
Strength class code	BS EN 338:2009
Design Cases Covered	1.25 D1 + 1.5 L1, 1.35 D1 + 1.05 L1
Deflection Cases Covered	1.0 D1 + 1.0 L1, 1.0 L1, 1.0 D1
Section Size	b = 60, h = 185, 185x60 in Strength Class C24
Section Properties (cm²,cm³,cm)	Area 111, $W_{el.y}$ 342.3, $W_{el.z}$ 111, i_y 5.34, i_z 1.73
Specification	1 : Internal use in continuously heated building Medium term loading, Calculate final deflection
Integrated Design Critical Case	: Dead+Live 1.25D1+1.50L1 (Ultimate)
Member Details	N_{Ed} = 0.0 kN, L = 4.355 m, L_y = 4.355 m, L_z = 4.355 m, $L_{cr.y}$ = 1.0 L_y, $L_{cr.z}$ = 1.0 L_z Bearing length 50, Distance to Bearing 150 mm

Grade and Admissible Stresses (Strength Class C24)

$f_{m.y.d} = K_{mod}.K_{hy}.K_{sys}.f_{m.k}/\gamma_m$	0.80 x 1.00 x 1.10 x 24.00/1.3	16.25 N/mm²	
$f_{m.z.d} = K_{mod}.K_{hz}.K_{sys}.f_{m.k}/\gamma_m$	0.80 x 1.20 x 1.10 x 24.00/1.3	19.51 N/mm²	
$f_{c.90.d} = K_{mod}.K_{c.90}.K_{sys}.f_{c.90.k}/\gamma_m$	0.80 x 1.50 x 1.10 x 2.50/1.3	2.54 N/mm²	
$f_{v.d} = K_{mod}.K_{sys}.f_{v.k}/\gamma_m$	0.80 x 1.10 x 4.00/1.3	2.71 N/mm²	
$E_{mean.fin} = E_{mean}/(1+K_{def})$	11000/(1+0.60)	6875 N/mm²	Deflection

Axial Load with Moments Check

Critical Design Location	X = 2.688		
$\sigma_{m.y.d} = M_y/W_{el.y}$	2.596 / 342.25 ≤ 16.25	7.59 N/mm²	OK
$U_{m.y} = \sigma_{m.y.d}/f_{m.y.d}$	7.590/16.246	0.467	OK
$U_{m.y}$	0.467	0.467	OK
$L_{eff}=L.K_{LTB}$	4.355x1.000	4.355	
$\sigma_{mcrit}=\pi\sqrt{(E_{05}.I_z.G_{05}.J)/(L_{eff}.W_y)}$	$\pi\sqrt{(7.40x333.00x0.46x1060.09)/(4.355x342.25)}$	23.210	
$\lambda_{r,elm}=\sqrt{(f_{mk}/\sigma_{mcrit})}$	$\sqrt{(24.00/23.21)}$	1.017	
k_{Crit}	$1.56-0.75\lambda_{r,elm}$	0.797	
$\sigma_{m.y.d}/(k_{Crit}\bullet f_{m.y.d})$	7.590/(0.797x16.246)	0.586	OK

Shear and Bearing Check

Critical Design Location	X = 4.355		
τ_a= 1.5 $V_{y.Ed}$ / Area / k_{cr}	1.5 x 3.104 / 111 / 0.67 ≤ 2.71	0.63 N/mm²	OK
$\sigma_{cax} = V_{y.Ed}$ / (b.I_y)	3.104 / (60 x 50) ≤ 2.54	1.03 N/mm²	OK

Deflection Check

Critical Load Case 003 : Dead+Live 1.00D1+1.00L1 (Serviceability)

$\delta = \delta_m + \delta_s$	In-span 15.49 ≤ L/250	15.49 mm	OK

Software produced by www.MasterSeries.com © Civil and Structural Computer Services Limited.

AFFINITY STRUCTURES
Soflock f7c01
Pine Lodge
Faringdon
Oxfordshire, SN7 8AU
Tel: 07932 901767

Job Ref : 1306PL
Sheet : New Rear First Floor Fram /
Made by : PM
Date : 28 February 2023 / Ver. 2022.14.08
Checked : PM
Approved : PM

MasterKey : Timber Design
Axial Load With Moment Design to BS EN 1995-1-1:2004 + A1:2008
Member TB B-A\1-3L1Id 19 @ Level 1

Summary Design Data

Eurocode National Annex	Using UK values
Strength class code	BS EN 338:2009
Design Cases Covered	1.25 D1 + 1.5 L1, 1.35 D1 + 1.05 L1
Deflection Cases Covered	1.0 D1 + 1.0 L1, 1.0 L1, 1.0 D1
Section Size	b = 100, h = 130, 130x100 in Strength Class C24
Section Properties (cm²,cm³,cm)	Area 130, $W_{el.y}$ 281.7, $W_{el.z}$ 216.7, i_y 3.75, i_z 2.89
Specification	1 : Internal use in continuously heated building Medium term loading, Calculate final deflection
Integrated Design Critical Case	: Dead+Live 1.25D1+1.50L1 (Ultimate)
Member Details	N_{Ed} = 0.0 kN, L = 4.355 m, L_y = 4.355 m, L_z = 4.355 m, $L_{cr.y}$ = 1.0 L_y, $L_{cr.z}$ = 1.0 L_z Bearing length 50, Distance to Bearing 150 mm

Grade and Admissible Stresses (Strength Class C24)

$f_{m.y.d} = K_{mod}.K_{hy}.K_{sys}.f_{m.k}/\gamma_m$	0.80 x 1.03 x 1.10 x 24.00/1.3	16.72 N/mm²	
$f_{m.z.d} = K_{mod}.K_{hz}.K_{sys}.f_{m.k}/\gamma_m$	0.80 x 1.08 x 1.10 x 24.00/1.3	17.62 N/mm²	
$f_{c.90.d} = K_{mod}.K_{c.90}.K_{sys}.f_{c.90.k}/\gamma_m$	0.80 x 1.50 x 1.10 x 2.50/1.3	2.54 N/mm²	
$f_{v.d} = K_{mod}.K_{sys}.f_{v.k}/\gamma_m$	0.80 x 1.10 x 4.00/1.3	2.71 N/mm²	
$E_{mean.fin} = E_{mean}/(1+K_{def})$	11000/(1+0.60)	6875 N/mm²	Deflection

Axial Load with Moments Check

Critical Design Location	X = 2.776		
$\sigma_{m.y.d} = M_y/W_{el.y}$	2.372 / 281.67 ≤ 16.72	8.42 N/mm²	OK
$U_{m.y} = \sigma_{m.y.d}/f_{m.y.d}$	8.420/16.718	0.504	OK
$U_{m.y}$	0.504	0.504	OK
$L_{eff}=L.K_{LTB}$	4.355x1.000	4.355	
$\sigma_{mcrit}=\pi\sqrt{(E_{05}.I_z.G_{05}.J)/(L_{eff}.W_y)}$	$\pi\sqrt{(7.40x1083.33x0.46x2294.61)/(4.355x281.67)}$	74.838	
$\lambda_{r,elm}=\sqrt{(f_{mk}/\sigma_{mcrit})}$	$\sqrt{(24.00/74.84)}$	0.566	
k_{Crit}	$\lambda_{r,elm}$ < 0.75	1.000	
$\sigma_{m.y.d}/(k_{Crit}\bullet f_{m.y.d})$	8.420/(1.000x16.718)	0.504	OK

Shear and Bearing Check

Critical Design Location	X = 4.355		
τ_a= 1.5 $V_{y.Ed}$ / Area / k_{cr}	1.5 x 3.064 / 130 / 0.67 ≤ 2.71	0.53 N/mm²	OK
$\sigma_{cax} = V_{y.Ed}$ / (b.l_y)	3.064 / (100 x 50) ≤ 2.54	0.61 N/mm²	OK

Deflection Check

Critical Load Case 003 : Dead+Live 1.00D1+1.00L1 (Serviceability)

$\delta = \delta_m + \delta_s$	In-span 22.29 ≤ L/250	22.29 mm	**Warning**

Software produced by www.MasterSeries.com © Civil and Structural Computer Services Limited.