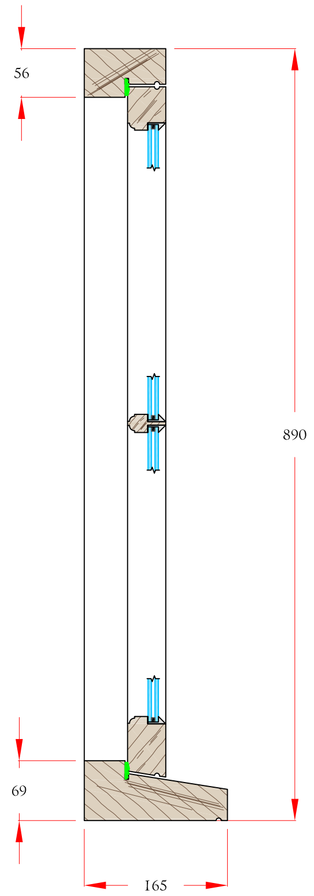

A - A

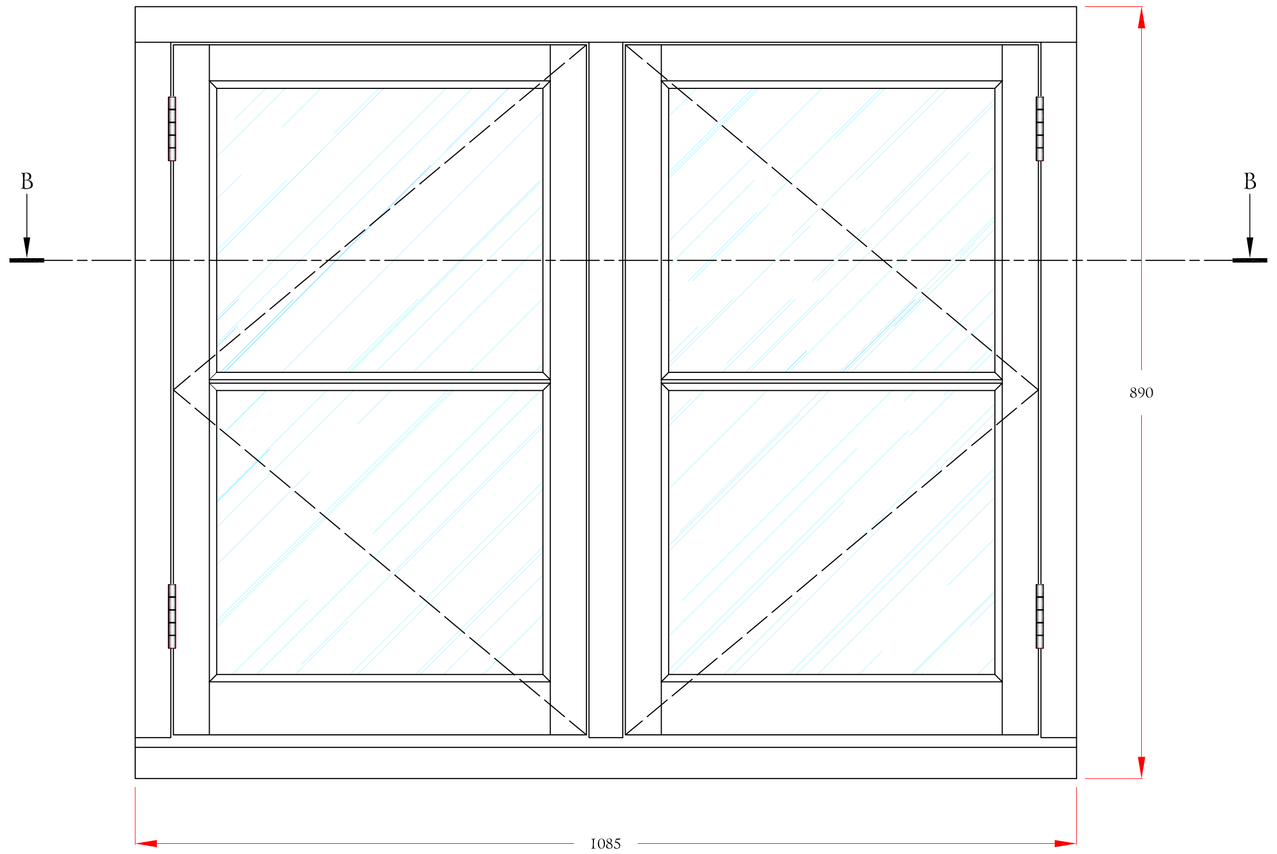

MATERIAL:
· SAPELE THROUGHOUT

GLASS:
· 4_4_4 HERITAGE SLIMLINE DG UNITS
· EXTERNALLY PUTTY GLAZED
· SOLID GLAZING BAR
· 0.5mm BED OF U9 SILICONE INTERNALLY
· BLACK SPACER

HARDWARE:
· BLACK IRON MONKEY TAIL CASEMENT STAY
· BLACK IRON MONKEY TAIL HANDLES
· LOCKS TBC
· BLACK BUTT HINGES REF: TBC
· AQUAMAC 124 WEATHERSEALS IN WHITE

FINISH:
· FULL FACTORY PAINT FINISH IN WHITE

NOTES:
· CLIENT TO CONFIRM DESIGN PRIOR TO MANUFACTURE

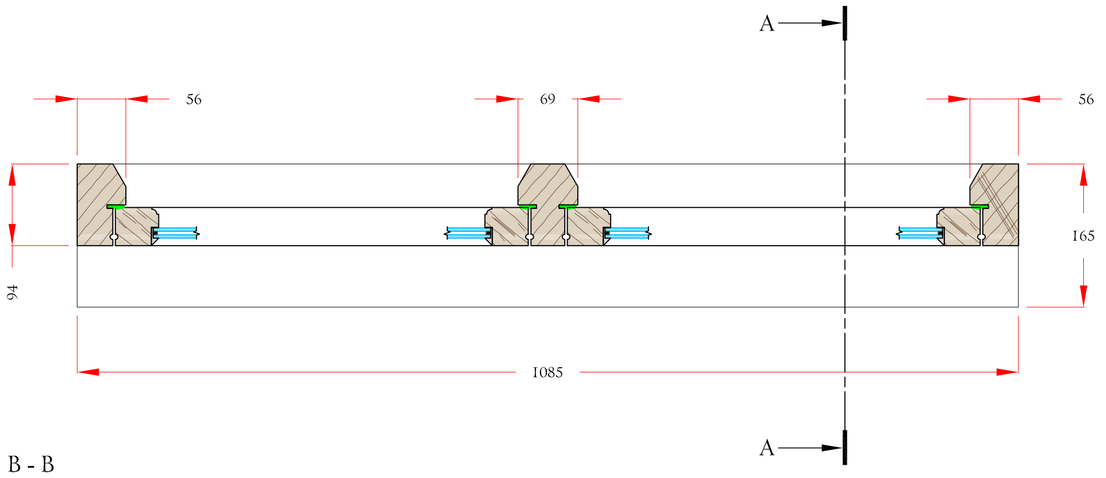

B - B





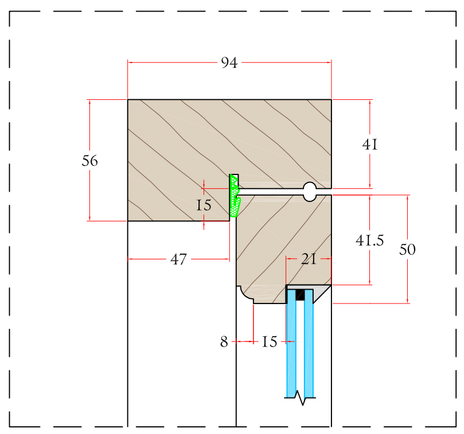

A HEAD DETAIL
Scale: 1:2

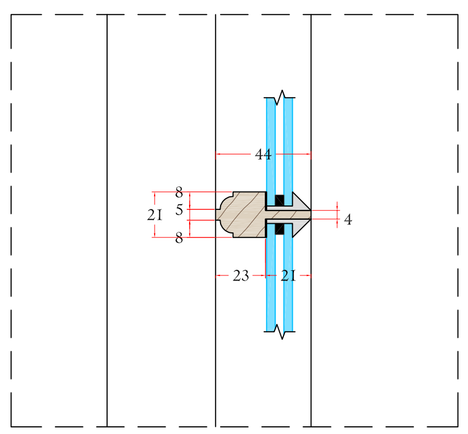

B BAR DETAIL
Scale: 1:2

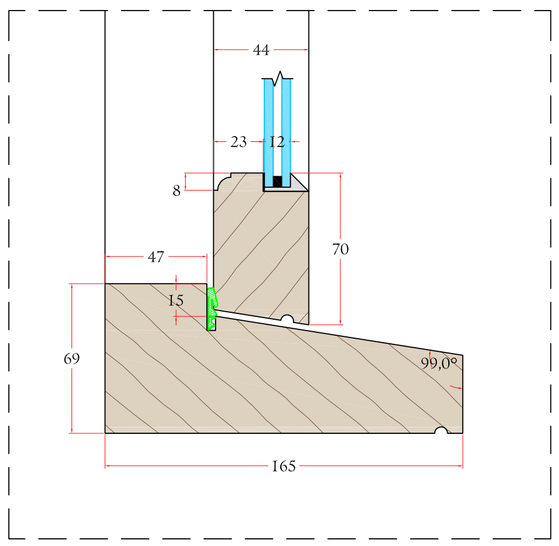

C CILL DETAIL
Scale: 1:2

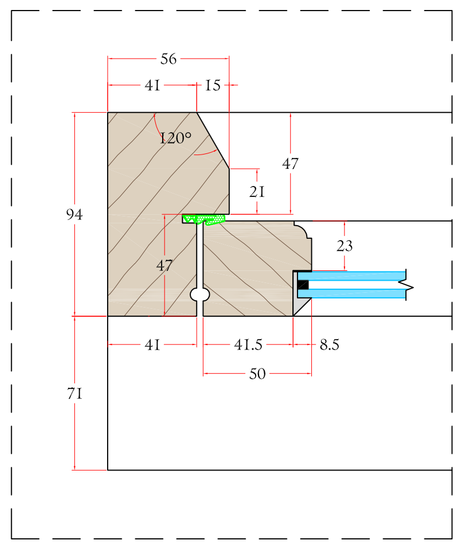

D JAMB DETAIL
Scale: 1:2

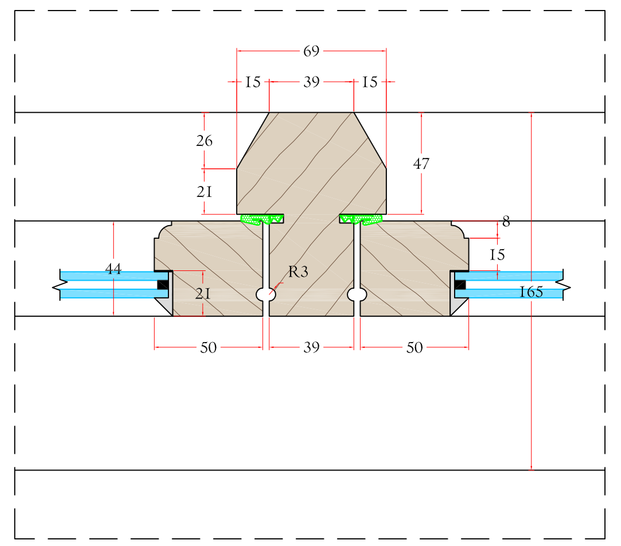

E MULLION DETAIL
Scale: 1:2

H.A. Planning
67 Cleevemount Road
Cheltenham,
Gloucester
GL52 3HD
07500 555495

Client: [redacted]

Description: Proposed New Casement Window No.8

Drawn: RR

Job: 900478

Scale @ A1: 1:2, 1:5

Date: 09.01.2023

Dwg No: RR 04