NOTES :

Original drawing size = A1
(841x594mm)



NORTH ELEVATION

Scale 1:100

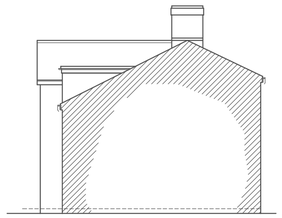

WEST ELEVATION

Scale 1:100

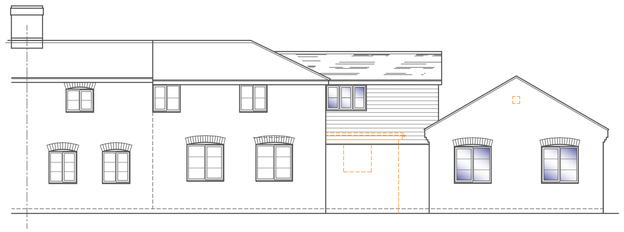

SOUTH ELEVATION

Scale 1:100



EAST ELEVATION

Scale 1:100

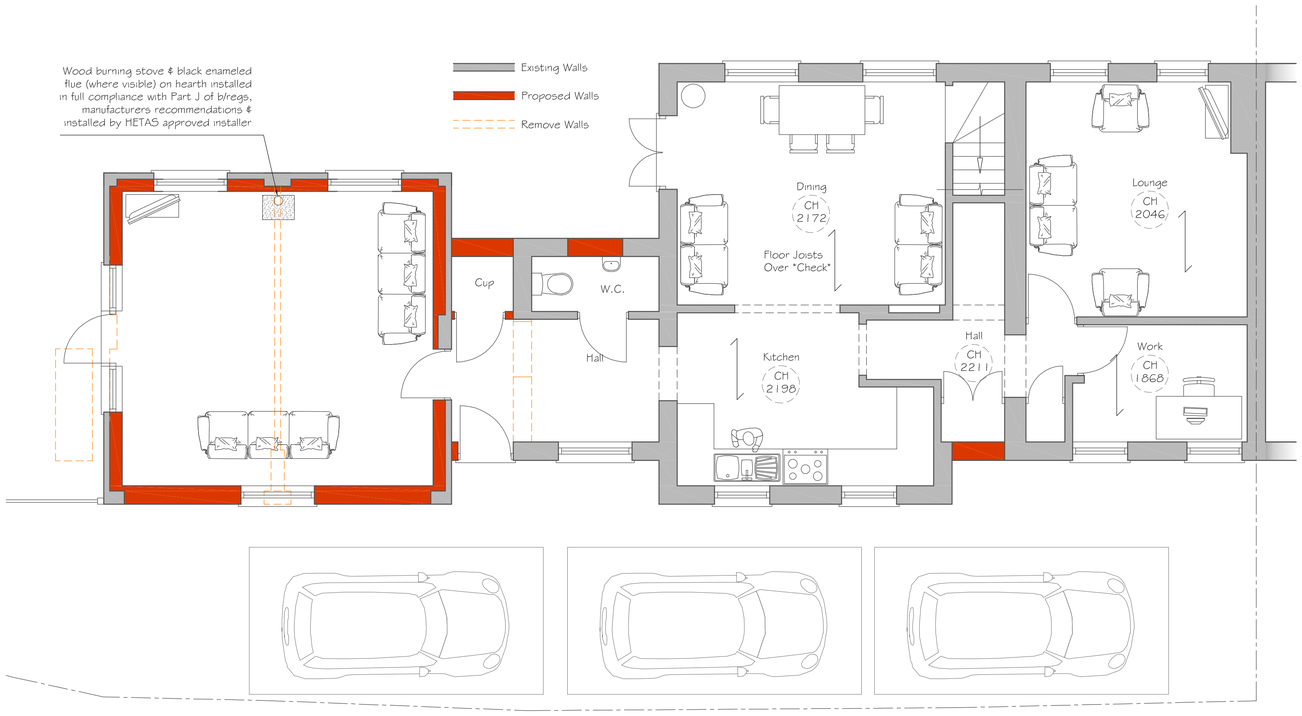

GROUND FLOOR PLAN

Scale 1:50

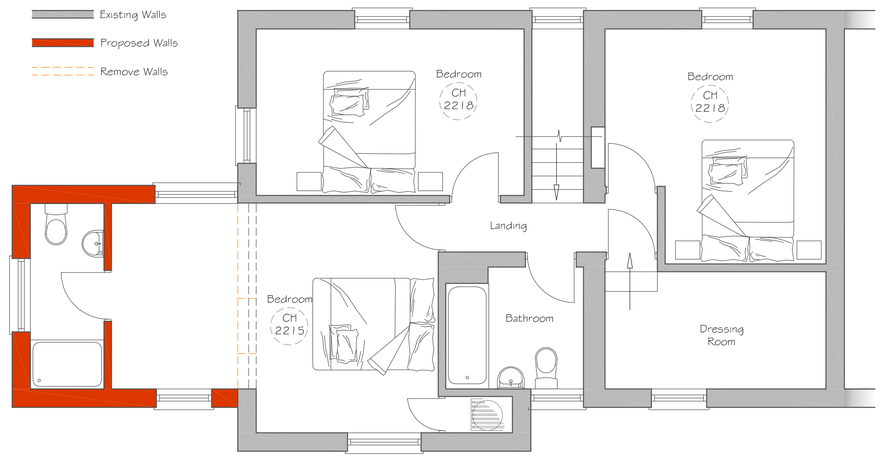

FIRST FLOOR PLAN

Scale 1:50

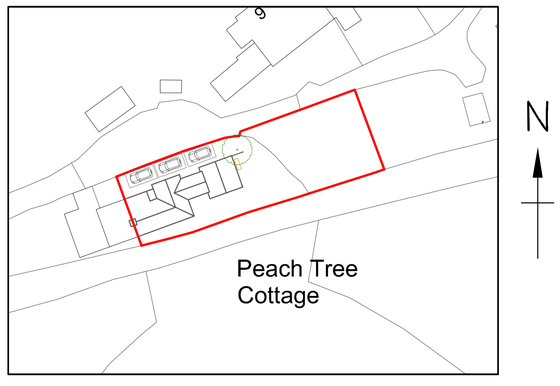

BLOCK PLAN

Scale 1:500

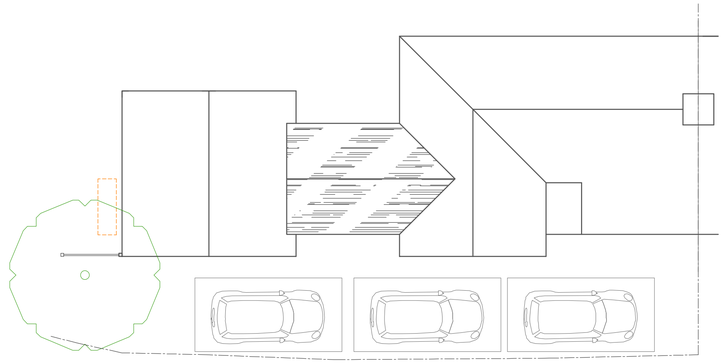

ROOF PLAN

Scale 1:100

1:20 [m]
0 0.5 1.0

1:50 [m]
0 0.5 1.0 1.5 2.0 2.5

1:100 [m]
0 1 2 3 4 5

1:200 [m]
0 5 10

1:500 [m]
0 5 10 15 20 25

1:1250 [m]
0 20 40 60

Alex Dawson
www.addraughting.co.uk
alex@addraughting.co.uk
01672 511412
07791 341698

59 Barrow Close
Marlborough
Wiltshire
SN8 2BE

AD DRAUGHTING
ARCHITECTURAL SERVICES

Client

JACKIE LUND

Job Title

EXTENSION AT:
1 PEACHTREE COTTAGE,
LAMPLANDS,
RAMSBURY,
WILTSHIRE,
SN8 2PW.

Drawing Title

PROPOSED ELEVATIONS AND PLANS

Scale AS SHOWN

Date 18/07/2023 | Drawn AD

Drawing No. 1140-02 | Rev F

841 x 594 A1