A2

Scale 1:5 0mm 100mm 200mm 300mm 400mm 500mm

Scale 1:2 0mm 50mm 100mm 150mm 200mm 250mm

Colin Brain

Rear elevation, second floor - Bed

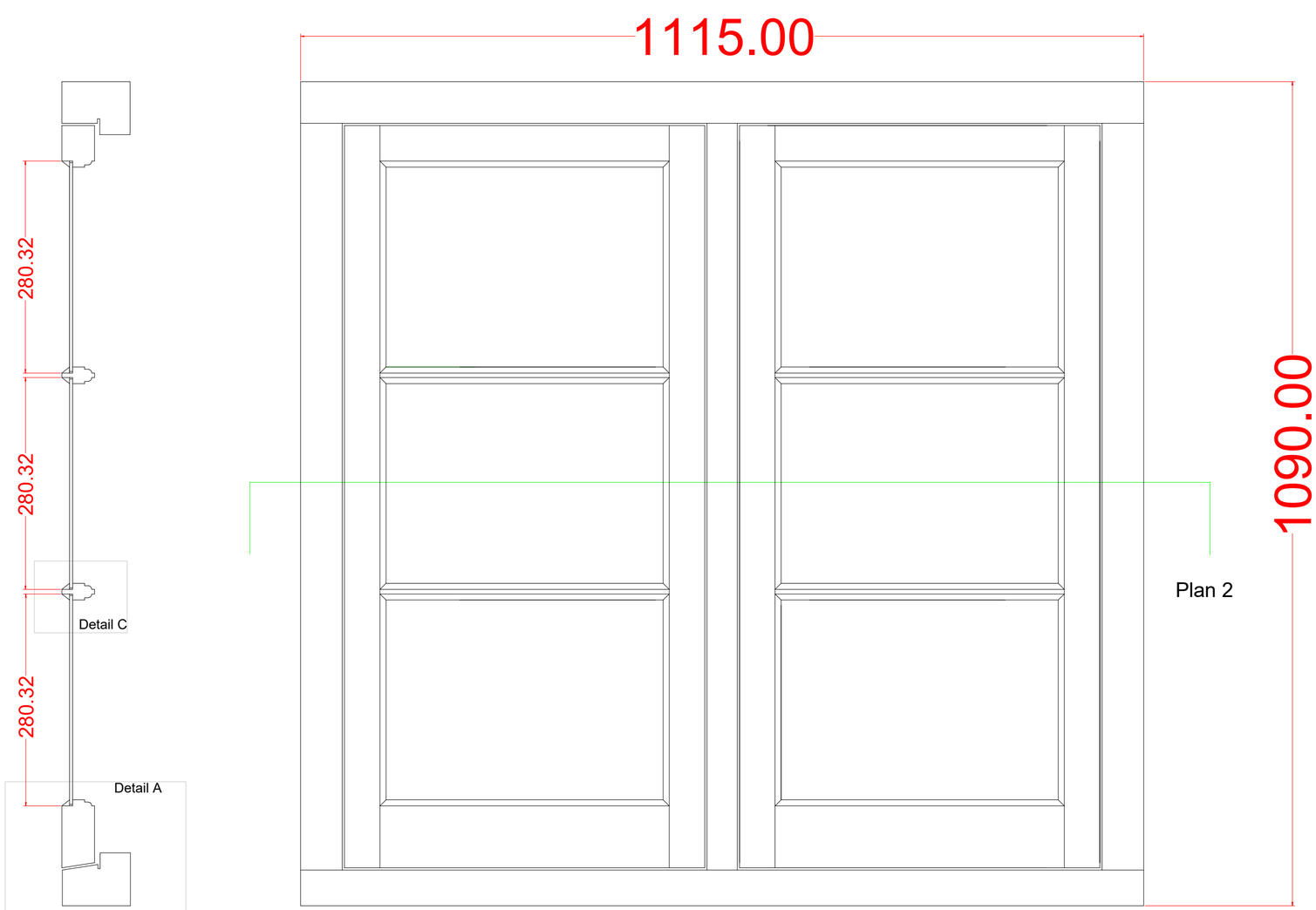

1. Elevation Scale 1:5

3. Section Scale 1:5

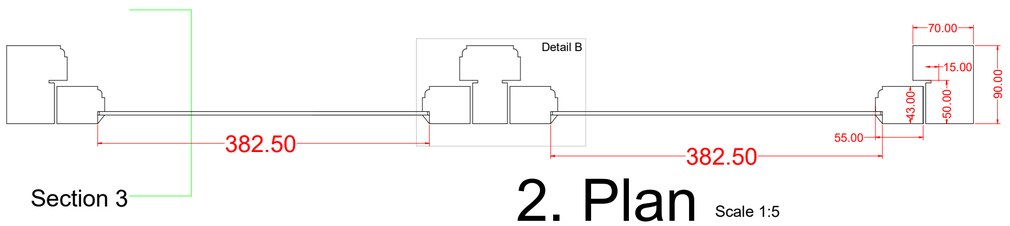

2. Plan Scale 1:5

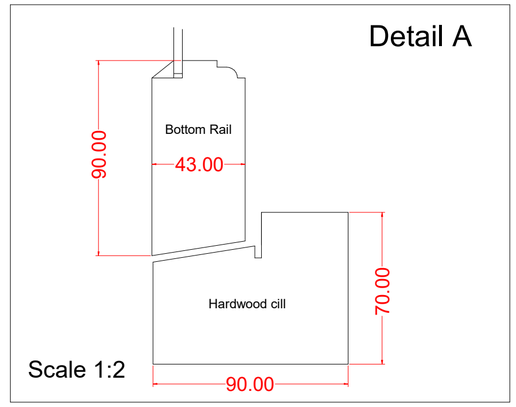

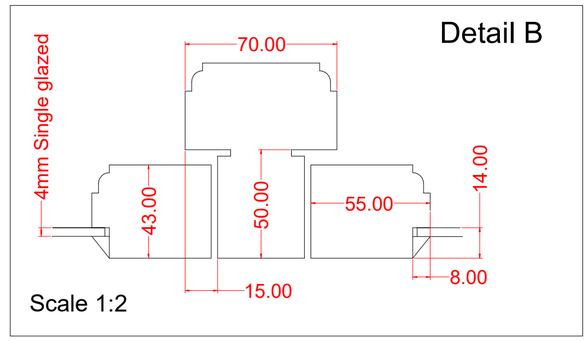

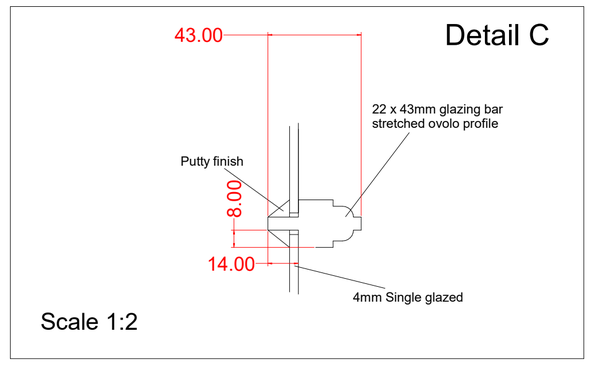

BOWDEN
TAILORED WOOD