Technical information

Be ready for the energy change



Vaillant Comfort for your home

Air-to-water heat pumps

A safe investment in the future



State-of-the-art heating technology with minimal environmental impact

Vaillant is continuously advancing the development of heat pump technology. The Vaillant research and development teams constantly strive to develop the most efficient and quiet heat pumps on the market, thoroughly testing them in our own testing centres for durability and performance. For example, we have climate and hail chambers where we can test for robustness and reliability in extreme conditions. Vaillant also manufactures only in Europe, so we can guarantee you and your customers receive the high quality expected from a Vaillant appliance.

Vaillant offers a great new model in our portfolio of air-to-water heat pumps with the introduction of the aroTHERM plus. This award-winning heat pump is the first in our range to use natural refrigerant R290. This refrigerant, commonly used in many household appliances, has a very low Global Warming Potential (GWP) that offers many advantages over refrigerants traditionally used in heat pumps.

The new aroTHERM plus heat pump has technical features for improved efficiency, as well as higher flow temperatures, so it's perfect for new and existing heating systems (including hybrid). It's also impressively quiet in operation and has been accredited by Quiet Mark*.

*Models 3.5, 5, 7 and 12kW

Always the right choice

Reliability and performance of the highest standards ensure peace of mind for your customers. It's so quiet, they won't even know it's on.

High performance

The aroTHERM plus heat pump has been designed to deliver the very best performance with low running costs, making it suitable for radiators as well as underfloor heating. With a flow temperature of up to 75°C, the aroTHERM plus can deliver more usable hot water with high hot water comfort levels and removes the need for direct electric immersion to sterilise the water, protecting from legionella.

Higher energy-efficiency

With a SCOP of up to 5.03, the aroTHERM plus is extremely energy efficient, enabling high energy savings against certain fossil fuels.
The aroTHERM plus can also be combined with photovoltaic systems and integrated into smart power grids (SG-ready), so your customers can enjoy the benefits of variable electricity tariffs.

Super quiet

With sound power as low as 54 dB for easier planning and siting, the aroTHERM plus is suitable for use in densely built-up terraced housing estates.

Natural refrigerant

Already fulfilling the next NZEB requirements, the aroTHERM plus uses monobloc technology with a hermetically sealed refrigerant circuit using the natural refrigerant, R290, to deliver the one of the lowest GWP of 3.

Why R290?
R290 is a natural refrigerant with a very low GWP* of three. This offers the following advantages:

- future-proof, as not affected by the F-Gas Regulation
- higher flow temperature of up to 75°C
- higher hot water comfort and protection against legionella without electric auxiliary heating
- wider performance envelope with operating temperature ranging between -25°C and +46°C
- Already fulfilling the next NZEB requirements, the aroTHERM plus uses monobloc technology with a hermetically sealed refrigerant circuit using natural refrigerant R290 to deliver the one of the lowest GWP of 3
- Reduced refrigerant charge compared to R410a and R32

Natural refrigerants are already used in many areas of our daily lives, e.g. in refrigerators and heat pump tumble-driers

Natural refrigerant GWP 3

Model calculation
R290 (aroTHERM plus)
0.6 kg R290 x 3 GWP **= 1.8 kg CO_2**

15 km journey by car

*Comparison of refrigerant GWP values:

CO_2	1
R290	3
R32	675
R410a	2,088

Introducing the perfect partner

Your customers have widely differing wishes and needs. We offer the system components that enable you to fulfil them all – whether they wish to integrate photovoltaics, a solar-thermal system or smart home technology. All conveniently manageable with a single controller – the new sensoCOMFORT. This enables you to quickly commission the system and lets your customers change daily settings at the flick of a wrist.

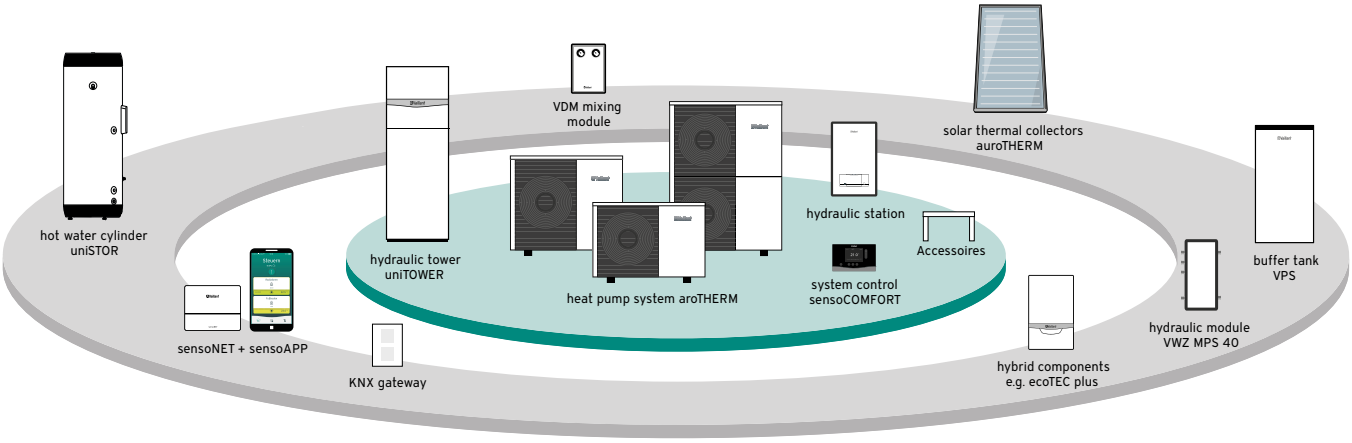

uniTOWER

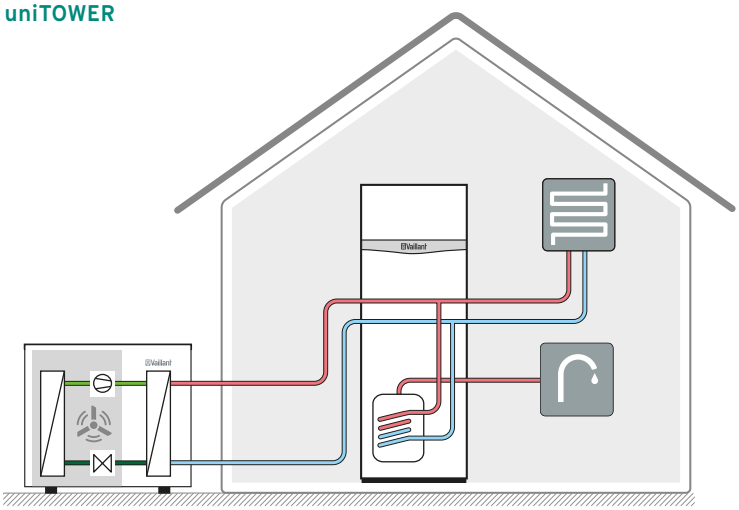

The uniTOWER is an integrated 190 litre cylinder with hydraulic components which can easily provide sufficient hot water for the needs of a family of five, including the use of rain showers. Thanks to its space-saving dimensions, the system is the perfect choice for new buildings. Installed indoors, the uniTOWER is about the size of a fridge freezer and saves valuable space in the room where it's installed.

Hydraulic station

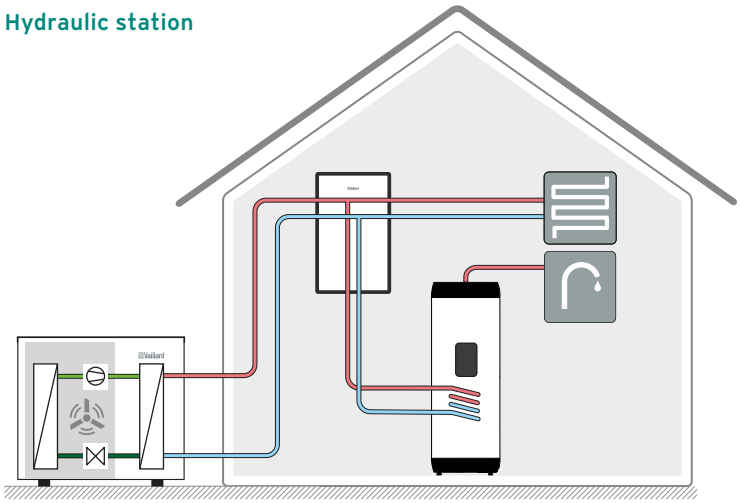

In the case of higher hot water demand, the aroTHERM plus can be used together with a wall-mounted hydraulic station and a wide range of accessories, including the uniSTOR heat pump cylinders and buffer tanks.

Features and benefits

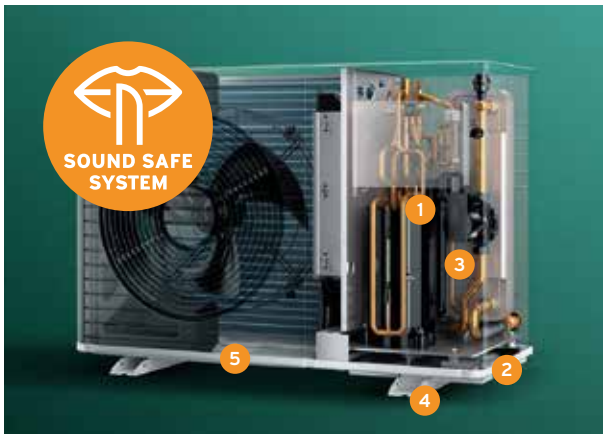

aroTHERM plus

1. Hermetically sealed – no refrigerant certification required
2. Floating floor design absorbs vibration and reduces noise
3. Vortex sensor for accurate performance analysis
4. Weatherproof material and paint make it an ideal choice for coastal areas
5. Integrated tray and trace heater to ensure clear condensation run



uniTOWER

1. 190-litre storage cylinder capacity, corresponds to up to 380-litres of usable hot water output
2. Hydraulic components already integrated, e.g. 15-litre expansion vessel
3. System accessory options, ready for integration, e.g. heating zone packs, 18-litre buffer or system separation plate heat exchanger
4. Modulating electric auxiliary heater with up to 6 kW
5. 3-way diverter valve
6. Electric wiring interface



Hydraulic module

1. Hydraulic components already integrated, including 10-litre expansion vessel
2. Modulating electric auxiliary heater with up to 6 kW
3. 3-way diverter valve
4. Continued use of existing hot water storage cylinders
5. Electric wiring interface



Heat pump interface

- Suitable for standard set-up and hybrid systems
- Heating system components can be placed to suit property layout
- Compatible with all Vaillant heat pump accessories including back-up heater, heat exchanger module and uniSTOR heat pump cylinders

SCOP and heating output

aroTHERM output		35°C flow		40°C flow		45°C flow		50°C flow		55°C flow	
		Output	SCOP	Output	SCOP	Output	SCOP	Output	SCOP	Output	SCOP
3.5kW	-5°C	4.2	4.41	4.1	4.03	4	3.65	3.9	3.37	3.8	3.10
	-3°C	4.6		4.4		4.3		4.2		4	
	0°C	4.7		4.7		4.6		4.5		4.4	
	2°C	4.9		4.9		4.9		4.7		4.6	
5kW	-5°C	6.3	4.48	6	4.13	5.6	3.77	5.5	3.41	5.4	3.06
	-3°C	6.8		6.4		6.1		5.9		5.8	
	0°C	6.9		6.7		6.6		6.4		6.2	
	2°C	7.1		7		6.9		6.7		6.5	
7kW	-5°C	8.2	4.36	8.1	4.13	8	3.91	7.5	3.65	7	3.39
	-3°C	8.8		8.6		8.4		7.9		7.4	
	0°C	9.5		9.3		9.1		8.6		8.1	
	2°C	10		9.8		9.6		9		8.5	
10kW	-5°C	9.9	5.03	9.7	4.58	9.4	4.13	9.1	3.85	8.8	3.58
	-3°C	10.7		10.3		10		9.6		9.2	
	0°C	11.9		11.6		11.3		10.7		10.2	
	2°C	12.8		12.5		12.1		11.5		10.9	
12kW	-5°C	13.1	4.88	12.8	4.55	12.5	4.21	11.7	3.92	10.8	3.63
	-3°C	13.9		13.4		12.9		12.1		11.2	
	0°C	15.2		14.6		14.1		13.2		12.3	
	2°C	16		15.5		14.9		13.9		13	

Sound power

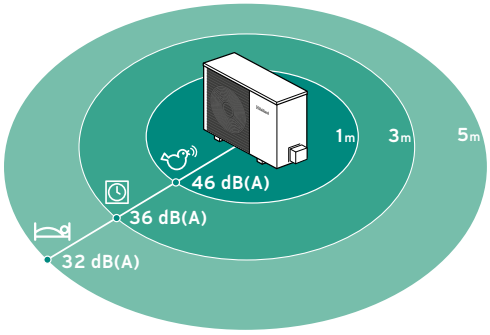

Model	Sound Power Level A7/W55	Sound Pressure Level		
		1m distance	3m distance	5m distance
aroTHERM plus 3.5kW	54 dB	46 dB(A)	36 dB(A)	32 dB(A)
aroTHERM plus 5kW	54 dB	46 dB(A)	36 dB(A)	32 dB(A)
aroTHERM plus 7kW	55 dB	47 dB(A)	37 dB(A)	33 dB(A)
aroTHERM plus 10kW	60 dB	52 dB(A)	42 dB(A)	38 dB(A)
aroTHERM plus 12kW	60 dB	52 dB(A)	42 dB(A)	38 dB(A)

Dimensions and clearances

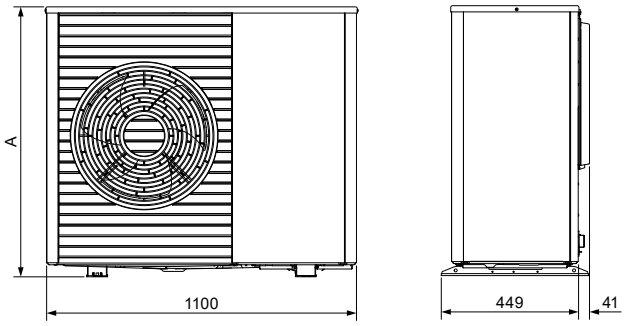

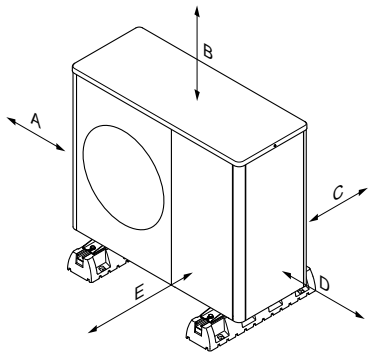

aroTHERM plus	Unit	Dimension A
3.5kW	mm	765
5kW	mm	765
7kW	mm	965
10kW	mm	1565
12kW	mm	1565

Minimum clearance	Unit	Heating mode	Heating and cooling mode
A	mm	100	100
B	mm	1000	1000
C	mm	200	250
D	mm	500	500
E	mm	600	600

R290 clearances

Clearances required for any drains, light wells or other openings

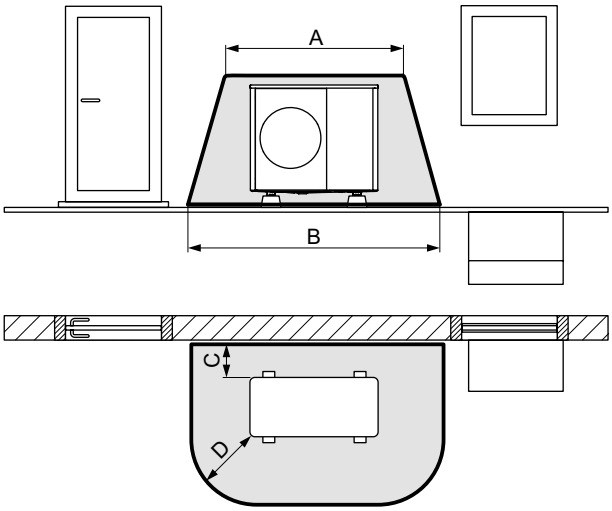

Minimum clearances	Unit	Dimension
A	mm	2100
B	mm	3100
C	mm	200/250
D	mm	1000

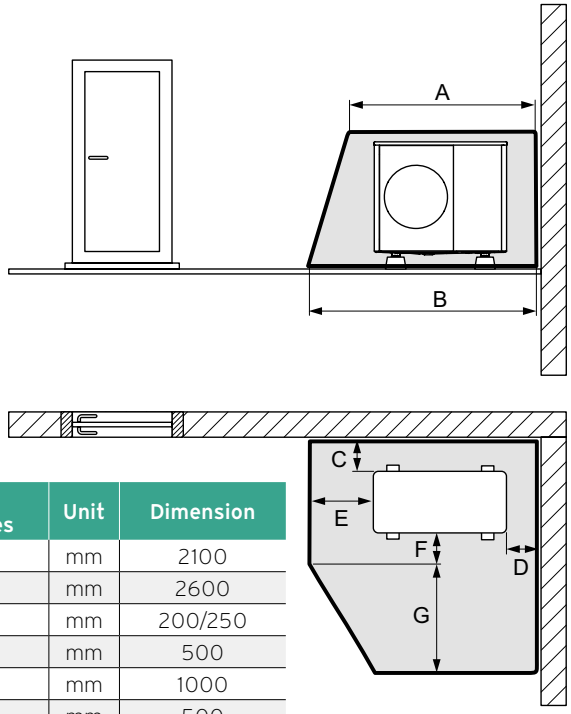

Minimum clearances	Unit	Dimension
A	mm	2100
B	mm	2600
C	mm	200/250
D	mm	500
E	mm	1000
F	mm	500
G	mm	1800

Application limits

heating mode

In heating mode, the product works at outdoor temperatures of -25 °C to 46 °C

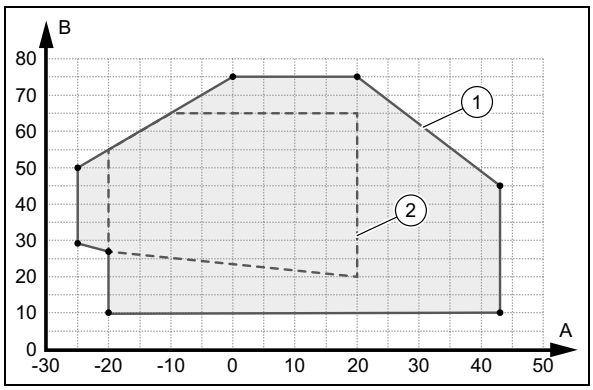

A Outdoor temperature

B Heating water temperature

1 Application limits, heating mode

2 Area of application, in accordance with EN 14511

DHW mode

For domestic hot water generation, the product works at outdoor temperatures of -20 °C to 46 °C.

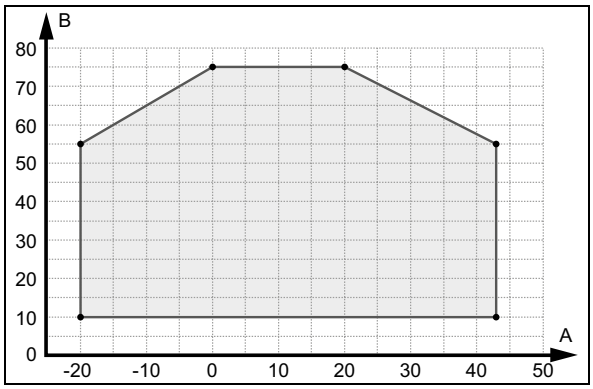

A Outdoor temperature

B Heating water temperature

Technical specifications

aroTHERM plus	Unit	3.5kW VWL 35 / 6	5kW VWL 55 / 6	7kW VWL 75 / 6	10kW VWL 105 / 6	12kW VWL 125 / 6
General						
Width	mm	1,100				
Height	mm	765		965	1,565	
Depth	mm	450				
Weight, ready for operation	kg	114		128	194	
Connection, heating circuit		G 1 1/4"				
Rated voltage	V	230 V (+10%/- 15%), 50 Hz, 1~/N/PE				
Rated current, maximum	A	14.3		15.0	23.3	
Fuse size		16			25	
Fuse type	A	C/D				
RCD type		A				
eBUS (2-core communication cable)	mm2	0.75				
Maximum length eBUS cable (communication cable)	m	50				
IP rating		IP 15 B				
Fan, power consumption	W	40			50	
Fan quantity		1			2	
Fan, air flow , maximum	m^3 /h	2,300			5,100	
Heating pump, power consumption	W	2 - 50			3 - 87	
Heating circuit						
Heating water temperature, minimum/maximum	° C	20 - 75				
Basic length of the heating water pipe, maximum, between the outdoor unit and indoor unit	m	20				
Operating pressure, minimum	bar	0.50				
Operating pressure, maximum	bar	3.00				
Volume flow, minimum	l/h	400		540	995	
Volume flow, maximum	l/h	860		1,205	2,065	
Water volume, in the outdoor unit	l	1.5		2.0	2.5	
Water volume, in the heating circuit, minimum, thawing mode, activated/deactivated back-up heater	l	15 / 40		20 / 55	45 / 150	
Remaining feed pressure, hydraulic	kPa (mbar)	56.0 (560.0)		44.0 (440.0)	55.0 (550.0)	

aroTHERM plus	Unit	3.5kW VWL 35 / 6	5kW VWL 55 / 6	7kW VWL 75 / 6	10kW VWL 105 / 6	12kW VWL 125 / 6
Refrigerant circuit						
Fluid type		R290				
Fluid fill quantity	kg	0.6		0.9	1.3	
Refrigerant, Global Warming Potential (GWP)		3				
CO_2 equivalent	t	0.0018		0.0027	0.0039	
Permissable operating pressure	bar	31.5				
Compressor type		Rotary piston			Scroll compressor	
Compressor oil type		Specific polyalkylene glycol (PAG				
Compressor, control		Electronic				

Noise emissions, heating mode						
Sound power, EN 12102, EN 14511 LWA, A7/W35	dB(A)	51		53	58	
Sound power, EN 12102, EN 14511 LWA, A7/W45	dB(A)	53			58	
Sound power, EN 12102, EN 14511 LWA, A7/W55	dB(A)	54		55	60	

Efficiency		
Energy efficiency class 35°C	(A+++ to F)	A+++
Energy efficiency class 55°C	(A+++ to F)	A++
Combination with uniTOWER		
Energy efficiency class	(A+++ to F)	A++
Energy efficiency class for hot water supply	(A+ to F)	A

uniTOWER	Unit	VIH QW 190 / 6
Total storage cylinder capacity	l	188
Temperature hot water (max. – with auxiliary heating)	°C	55 - 75
Dimensions, unpacked (height/width/depth)	mm	1880 x 599 x 693
Weight, unpacked	kg	175
Auxiliary electric heater	kW	6kW (230V/50Hz) / 9kW (400V/50Hz)

Hydraulic station	Unit	VWZ MEH 97
Dimensions, unpacked (height/width/depth)	mm	720 x 440 x 350
Weight, unpacked	kg	15
Power electric backup heater	kW	6 kW (230V/50Hz) / 9 kW (400V/50Hz)

Description	Article number
aroTHERM plus with heat pump interface	
aroTHERM plus 3.5kW - VWL 35 / 6	0010037211
aroTHERM plus 5kW - VWL 55 / 6	0010037212
aroTHERM plus 7kW - VWL 75 / 6	0010037213
aroTHERM plus 10kW - VWL 105 / 6	0010037214
aroTHERM plus 12kW - VWL 125 / 6	0010037215
aroTHERM plus with hydraulic module	
aroTHERM plus 3.5kW - VWL 35 / 6	0010037206
aroTHERM plus 5kW - VWL 55 / 6	0010037207
aroTHERM plus 7kW - VWL 75 / 6	0010037208
aroTHERM plus 10kW - VWL 105 / 6	0010037209
aroTHERM plus 12kW - VWL 125 / 6	0010037210
aroTHERM plus with uniTOWER	
aroTHERM plus 3.5kW - VWL 35 / 6	0010037201
aroTHERM plus 5kW - VWL 55 / 6	0010037202
aroTHERM plus 7kW - VWL 75 / 6	0010037203
aroTHERM plus 10kW - VWL 105 / 6	0010037204
aroTHERM plus 12kW - VWL 125 / 6	0010037205

Compatible with



uniSTOR



sensoCOMFORT



VRC 700

Accessories	Article number
aroTHERM connection kit for ground install	0010027971
aroTHERM connection kit for ground install extension	0010027972
aroTHERM connection kit for wall install	0010027974
aroTHERM straight pipe connection kit	0010027976
750mm flexihose for air-to-water heat pump (pair)	0020165288
Snow Spacer	0010027984
Wall bracket for insulated wall	0020250224
Wall bracket for non-insulated wall	0020250225
Anti-vibration feet large	0020250226
Anti-vibration rubber feet small	0020252091
Coding resistor active cooling	0020269259
Discharge vessel	0020145563
aroTHERM 45 litre buffer	0010038365
aroTHERM heat exchanger module	0020222285
aroTHERM inline 6kW back-up heater	0020222286
VR 10 temperature sensor	306787
WH40 low-loss header (flow rates up to 3,000 litres per hour)	306720
WH95 low-loss header (flow rates up to 8,000 litres per hour)	306721
VR 32/B eBUS coupler (includes housing)	0020235465
VR 32 eBUS coupler	0020139895
Ball filter valve 28mm	0010038133
uniTOWER accessories	
uniTOWER decoupling module (small) for 3.5 - 7kW model	0010027982
uniTOWER decoupling module (large) for 10 and 12kW model	0010027973
uniTOWER 1" adapter connection kit	0020269275
18l Buffer cylinder for uniTOWER	0020269273
uniTOWER multi-zone kit - 1 direct zone	0020170507
uniTOWER extension set - 2 direct zones	0020170509
uniTOWER extension set - 1 mixed zone	0020170508
Circulation set without pump	0020170502
Circulation set with pump	0020170503
2l brine expansion vessel	0010030975

Description	Pack contents	Article number
VRC 700		
VRC 700 wired, weather compensating programmable room thermostat	-	0020236291
VRC 700f wireless, weather compensating, programmable room thermostat	-	0020259829
One wired heating zone and hot water system	VRC 700, VR 70	0020236292
One wireless heating zone and hot water system	VRC 700f, VR 70	0020259830
One wired heating zone and solar thermal hot water system	VRC 700, VR 70, VR 11	0020236295
One wireless heating zone and solar thermal hot water system	VRC 700f, VR 70, VR 11	0020259833
Two wired heating zones and hot water system	VRC 700, VR 70, VR 91	0020236293
Two wireless heating zones and hot water system	VRC 700f, VR 70, VR 91f	0020259831
Two wired heating zones and solar thermal hot water system	VRC 700, VR 70, VR 11, VR 91	0020259834
Two wireless heating zones and solar thermal hot water system	VRC 700f, VR 70, VR 11, VR 91f	0020259835
Three wired heating zones and hot water system	VRC 700, VR 71, two VR 91	0020236294
Three wireless heating zones and hot water system	VRC 700f, VR 71, two VR 91f	0020259832
VR 70 wiring centre for up to two zones	-	0020184844
VR 71 wiring centre for up to three zones	-	0020184847
VR 91 wired, additional room thermostat	-	0020171334
VR 91f wireless, additional room thermostat	-	0020231566
VR 40 two-in-seven multifunction module	-	0020017744
VR 11 solar collector NTC	-	306788
VR 10 immersion or contact sensor bare ends	-	306787
VR 32 eBUS coupler	-	0020139895
sensoCOMFORT		
sensoCOMFORT wired weather compensating programmable room thermostat	-	0010036819
sensoCOMFORT RF wireless weather compensating programmable room thermostat	-	0010036820
One wired heating zone and hot water system	sensoCOMFORT, VR 71	0010036821
One wireless heating zone and hot water system	sensoCOMFORT RF, VR 71	0010036826
Two wired heating zones and hot water system	sensoCOMFORT, VR 71, VR 92	0010036822
Two wireless heating zones and hot water system	sensoCOMFORT RF, VR 71, VR 92f	0010036827
Three wired heating zones and hot water system	sensoCOMFORT, VR 71, 2x VR 92	0010036823
Three wireless heating zones and hot water system	sensoCOMFORT RF, VR 71 and 2x VR 92f	0010036828
Four wired heating zones and hot water system	sensoCOMFORT, VR 71, VR 70, 3x VR 92	0010036824
Five wired heating zones and hot water system	sensoCOMFORT, VR 71, VR 70, 4x VR 92	0010036825
VR 10 immersion or contact sensor bare ends	-	306787
VR 32 eBUS coupler	-	0020139895
VR 70 wiring centre	-	0020184844
VR 71 wiring centre	-	0020184847
VR 92 wired additional room thermostat	-	0020260925
VR 92f wireless additional room thermostat	-	0020260940
sensoNET internet gateway	-	0020260963
VR 40 two-in-seven multifunctional module	-	0020017744
VR 32/B eBUS coupler (includes housing)	-	0020235465

Our experience is your guarantee

For over 140 years, Vaillant has been among the technology leaders when it comes to innovative heating solutions, with specific expertise in the area of heat pumps for more than 40 years. Our proprietary solutions - many of which are patented - have made this technology reliable, efficient and suitable for everyday life. More than 200,000 heat pumps installed around the world prove this in use each day. Benefit from our experience:

- Products developed in Germany and manufactured exclusively in the EU
- 100% test for each heat pump on the production line
- Toughest weather conditions simulated at our own test centres, in cold chambers with temperatures down to –25°C
- Vaillant heat pumps are among the quietest on the market
- High level of safety due to use of playground standards
- Quality management as per EN ISO 9001 and EN ISO 14001



Climatic chambers simulate all possible operating conditions



Optimisation of components in the acoustic lab

Renewable service and technical enquiries
For technical assistance:
Telephone: 0330 100 3540
Email: aftersales@vaillant.co.uk

General enquiries
If you have a general enquiry our friendly reception staff will happily point you in the right direction:
Telephone: 0345 602 2922

Training enquiries
Vaillant provides many different training courses. For more information:
Telephone: 0345 601 8885
Email: training@vaillant.co.uk

VaillantUK
vaillantuk
VaillantUK
vaillant.uk
Vaillant UK

Vaillant

Heating Hot water Renewables

Vaillant Group UK Ltd.
Nottingham Road, Belper, Derbyshire DE56 1JT
Telephone 0345 602 2922
www.vaillant.co.uk/renewables
info@vaillant.co.uk

VALTB2BSATHERM0420