© This Drawing is the copyright of benjamin + beauchamp architects ltd.

benjamin + beauchamp architects ltd accept no liability for any expense, loss or damage of whatsoever nature and however arising from any variation made to this drawing; or in the execution of the work to which it relates, which has not been referred to them and their approval obtained.

P:\Longleat - Longleat House - 0155\Drawings, Photos & Graphics\B2 Drawings\Drawing board\0155-05 Windows\0155-05.P.010 Existing and Proposed Window Details.dwg

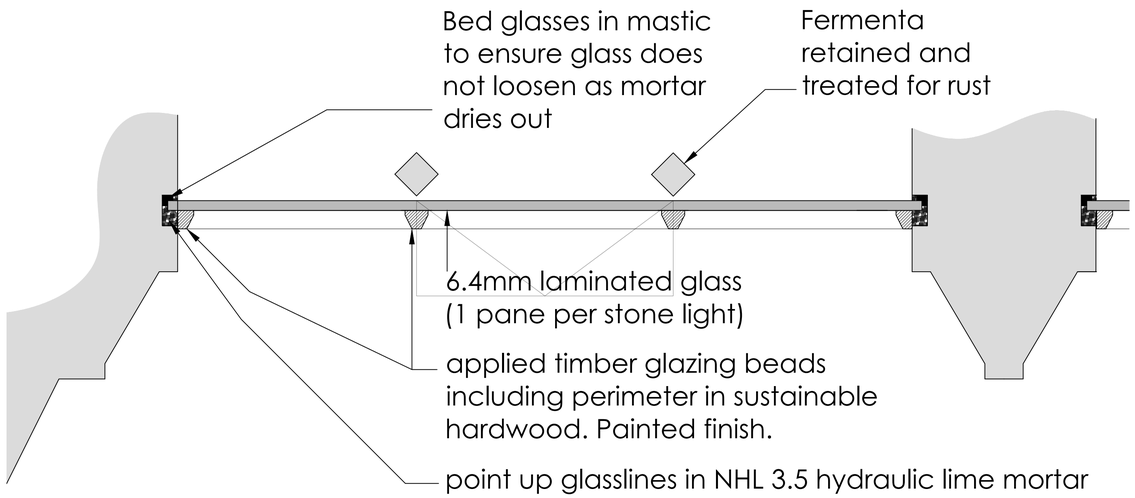

1 Proposed Detail plan 1:2

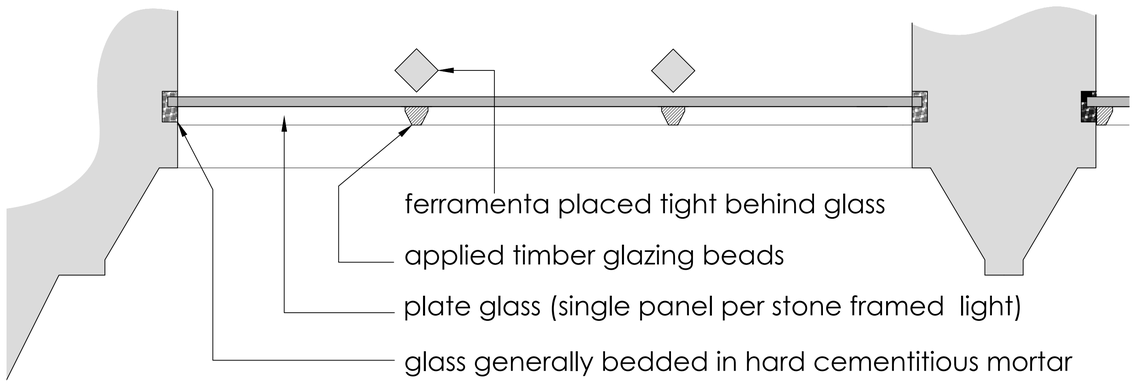

2 Existing Detail plan 1:2

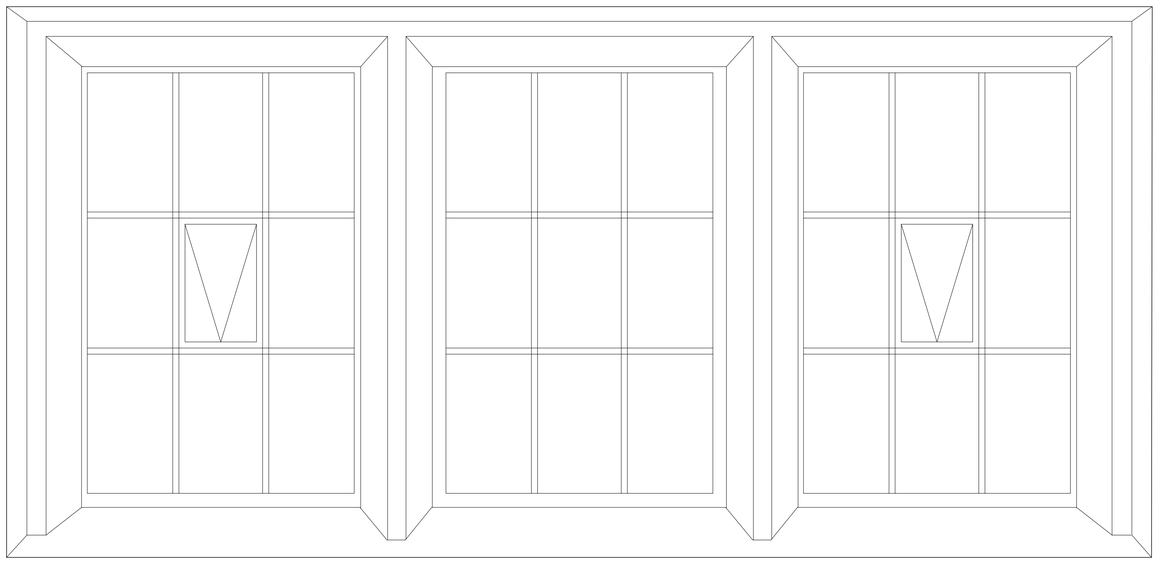

3 Window Elevation 1:5

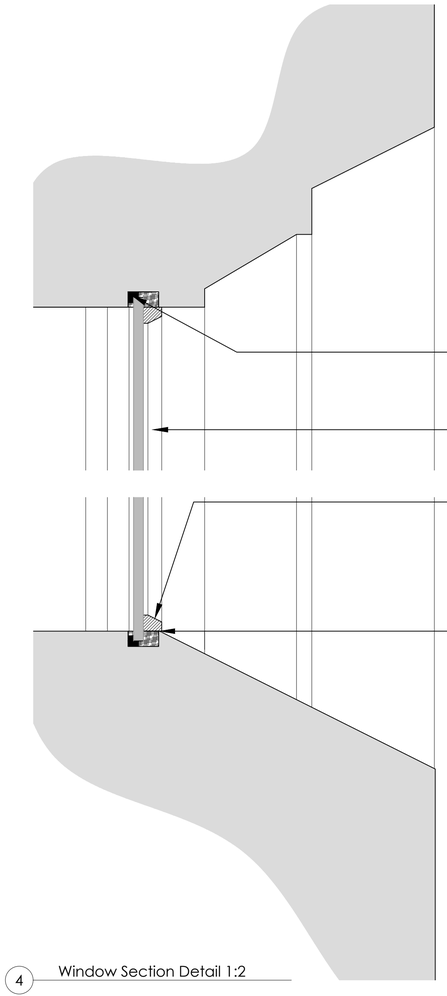

4 Window Section Detail 1:2

1:5
mm 100 200 300 400 500

1:2
mm 100 200

Revision | Date | Initials | Notes

Project
LONGLEAT
Longleat House

Title
Existing and Proposed Window details

Stage
PRELIMINARY

benjamin + beauchamp
architecture design conservation
the borough studios, the borough,
wedmore, somerset BS28 4EB
T 01934 713313 **F** 01934 713314

Drawn By: GC | Date: 10/05/23 | Scale: Varies @A1

Drawing No: 0155-05.P.010 -