HAYDEN'S
Arboricultural Consultants

Tree Survey, Arboricultural Impact Assessment
Preliminary Arboricultural Method Statement & Tree Protection Plan
In Accordance with BS 5837:2012

Proj. No **9393**	**McDonald's, Hilperton Road, Trowbridge, BA14 6JB**		
Client:		McDonald's Restaurants Limited	
Date of Report:	19/04/2023	Revision:	B

Tree Survey, Arboricultural Impact Assessment, Preliminary Arboricultural Method Statement & Tree Protection Plan – In Accordance with BS 5837:2012

Summary

The purpose of this report is to provide a preliminary consideration of the arboricultural implications created by the proposed development. In accordance with the feasibility and planning sections of BS5837:2012 *"Trees in relation to design, demolition and construction – Recommendations"*, trees deemed to be within the influencing distance of the projected construction have been evaluated for quality, longevity and initial maintenance requirements. Where trees do not have to be removed for health and safety reasons, a detailed and objective assessment has been made of the consequences of the intended layout.

In this circumstance it is intended to construct a new restaurant with associated drive through, parking and landscaping. As a result, six individual trees, two groups of trees, two areas of trees, two hedges and two woodlands were inspected. The arboricultural related implications of the proposal are as follow

1 In addition to trees which require felling irrespective of development, it is necessary to fell a section of one category 'C' hedge (H002) to achieve the proposed layout. Additionally, one tree (T002) and one group of trees (G001) require minor surgery to permit construction space.

2 The alignment of the restaurant and retaining wall does not encroach within the Root Protection Areas of any trees that are to be retained. As assessed in accordance with BS5837:2012, specialist foundation designs or construction techniques will therefore not be required to prevent damage to tree roots. Specialist foundations may still be required for other reasons, including mitigating the influencing distance of tree roots, subject to expert advice from a Structural Engineer.

3 This report recommends that specialist advice is obtained by expert practitioners in other disciplines. Such input should always be sought prior to construction to demonstrate that the techniques and methods hereby proposed are achievable. In this circumstance it is necessary to contact the following:

- Structural Engineer (foundation design, items 4.4.1 and 4.4.2)

4 All trees and landscape features that are to remain as part of the development should suffer no structural damage provided that the findings with this report are complied with in full. This includes ensuring that protective fencing is erected as detailed at items 4.6 and 5.1 of this report.

5 Post Planning Permission – Subject to achieving Planning Permission, a detailed Arboricultural Method Statement and Tree Protection Plan will be required. This will include the following: fencing type, service drawings, drainage proposals, access facilitation pruning specification, project phasing and an auditable monitoring schedule.

Given the above, there are no overt or overwhelming arboricultural constraints that can be reasonably cited to preclude the proposed construction.

© 2023 Hayden's Arboricultural Consultants Limited

Contact Details

Client – McDonalds Restaurants Limited			
Address 11-59 High Road Finchley London N2 8AW	**Contact** Robert Porter	**Tel:** **E-mail:**	- robert.porter@uk.mcd.com

Local Planning Authority – Wiltshire Council			
Address County Hall Bythesea Road Trowbridge Wiltshire BA14 8JN	**Trees Officer** David Wyatt	**Tel:** **E-mail:**	0300 456 0100 -

Arboricultural Consultant – Hayden's Arboricultural Consultants Limited			
Address Unit 6 Enterprise House Cherry Orchard Lane Salisbury Wiltshire SP2 7LD	**Report Author** Nick Hayden	**Tel:** **E-mail:**	01284 765391 nick@treesurveys.co.uk

© 2023 Hayden's Arboricultural Consultants Limited

Contents

1.0 Introduction

2.0 The Site

3.0 Tree Survey

4.0 Arboricultural Impact Assessment

5.0 Design Advice, Preliminary Arboricultural Method Statement & Tree Protection Plan

6.0 Recommendations

7.0 Limitations & Qualifications

8.0 References

9.0 Appendices

© 2023 Hayden's Arboricultural Consultants Limited

1.0 Introduction

1.1 Terms of Reference

1.1.1 Hayden's Arboricultural Consultants Limited has been commissioned by McDonalds Restaurants Limited to prepare a Tree Survey, Arboricultural Impact Assessment, Preliminary Arboricultural Method Statement and Preliminary Tree Protection Plan for the existing trees at Hilperton Drive, Trowbridge, BA14 6JB.

1.1.2 The site survey was carried out on 04/03/2022. The relevant qualitative and quantitative tree data was recorded to assess the condition of the existing trees, their constraints upon the prospective development and the necessary protection and construction specifications required to allow their retention as a sustainable and integral part of the completed development.

1.1.3 Information is given on condition, age, size and indicative positioning of all the trees, both on and affecting the site. This is in accordance with the British Standard 5837:2012 *Trees in relation to design, demolition and construction - Recommendations.*

1.2 Scope of Works

1.2.1 The survey of the trees and any other factors are of a preliminary nature. The trees were inspected based on the Visual Tree Assessment (VTA) method as developed by Mattheck and Breloer (1994). The trees were inspected from ground level with no climbing inspections undertaken. It is not always possible to access every tree and as such some measurements may have to be estimated. Trees with estimated measurements are highlighted in the schedule of trees. No samples have been removed from the site for analysis. The survey does not cover the arrangements that may be required in connection with the removal of existing underground services.

1.2.2 Whilst this is an arboricultural report, comments relating to non arboricultural matters are given, such as built structures and soil data. Any opinion thus expressed should be viewed as provisional and confirmation from an appropriately qualified professional sought. Such points are clearly identified within the body of the report.

1.2.3 An intrinsic part of tree inspection in relation to development is the assessment of risk associated with trees near persons and property. Most human activities involve a degree of risk with such risks being commonly accepted if the associated benefits are perceived to be commensurate. In general, the risk relating to trees tends to increase with the age of the trees concerned, as do the benefits. It will be deemed to be accepted by the client that the formulation of the recommendations for all tree management will be guided by the cost-benefit analysis (in terms of amenity) of the tree work.

1.2.4 Where the trees inspected stand within woodland, the frequency with which these trees/woodlands are accessed, or will be accessed, must be considered as an integral part of the recommendations given for their future management. Priority will be given to those trees near existing and proposed footpaths, public highways and site boundaries where it is assumed usage will be more frequent and therefore of a potentially higher risk. Many of the trees surveyed within the woodland areas present little or no risk and could therefore be left unmanaged. However, the decision regarding the frequency of use of these areas and the management decisions taken based on this frequency, must ultimately be the responsibility of the client.

© 2023 Hayden's Arboricultural Consultants Limited

1.3 Documentation

1.3.1 The following documentation was provided prior to the commencement of the production of this report:

- Email of instruction received from Rob Porter on 25th November 2022
- Definition of site boundary - drawing no. 8297-SA-8017-P004-A
- Topographical survey – drawing no. 22674-TS01
- Proposed site layout - drawing no. 8297-SA-8017-P004-D

2.0 The Site

2.1 Overview

2.1.1 The site is land to the east of Hilperton Drive, Trowbridge and it is currently open land. It is bordered by the A361 on its northern and western aspects, industrial units on its eastern aspect and woodland and agricultural land on its southern aspect. The trees surveyed were found to be of mixed age and condition and to provide a variety of amenity benefits.

2.2 Soils

2.2.1 The soil type commonly associated with this site are generally shallow and lime-rich over chalk or limestone. They are of moderate lime-rich fertility and typically support herb-rich downland and limestone pastures; limestone pavements in the uplands; Beech hangers and other lime-rich woodland type habitats. This soil type constitutes approximately 7.0% the total English land mass.

2.2.2 The data given was obtained from a desk top study which provides indications of likely soil types. This information is not comprehensive and therefore any decisions taken with regards the management, usage or construction on site should be based on a detailed soil analysis.

2.2.3 Further to item 2.2.2, this report provides no information on soil shrinkability. It may be necessary for practitioners in other disciplines (e.g. engineers considering foundation design) to obtain this data as required.

2.3 Statutory Tree Protection

2.3.1 Hayden's Arboricultural Consultants Limited have been informed that at the *date of the tree inspection* the trees concerned were not located within a Conservation Area or the subject of a Tree Preservation Order. As such, no written permission would be required from the Local Planning Authority (LPA), Wiltshire Council, prior to commencing works to trees. However, it should be noted that Wiltshire Council have the power to serve Tree Preservation Orders very rapidly and it is therefore incumbent upon anyone wishing to undertake work to any trees to contact the LPA prior to commencing works to ensure that the situation has not changed.

This information was sourced using the LPA's Online Mapping System (as instructed by them) and to our best knowledge was current and accurate at the time the information was accessed. We would advise it prudent that before any tree work commences, this is checked directly with the LPA to confirm that their online mapping system is definitive.

© 2023 Hayden's Arboricultural Consultants Limited

2.3.2 Hedgerow Regulations and Inclosure Act

Certain hedgerows within the United Kingdom are protected under The Hedgerow Regulations 1997. The regulations apply to any hedgerow growing in, or adjacent to, any common land, protected land (local nature reserves and SSSIs), or land used for agriculture, forestry or the breeding or keeping of horses, ponies or donkeys, if it: (a) has a continuous length of, or exceeding 20m; or (b) it has a continuous length of less than 20m and, at each end, meets another hedgerow. The regulations do not apply to hedgerows within the curtilage of, or marking a boundary of the curtilage of, a dwelling house.

Anybody wishing to remove or destroy a hedge must apply to their LPA for consent. Substantial fines exist for not complying with the requirements of The Hedgerow Regulations. Older hedges could be protected by old Inclosure Acts. These Acts may require that hedges are retained and managed in perpetuity.

It is recommended professional legal advice be sought before removing hedgerows to determine whether the hedgerow might be protected by the Inclosure Act. Details of the Inclosures Act are held by the Local Records Office.

3.0 Tree Survey

3.1 As part of this survey a total of six individual trees, two groups of trees, two areas of trees, two hedges and two woodlands have been identified. These have been numbered T001 – T006, G001 – G002, A001 – A002, H001 – H002 and W001 – W002 respectively.

3.2 A topographical survey was provided which showed the position of the trees on site. However, it should be noted that topographical surveys are not always comprehensive and sometimes it is considered appropriate to record details of trees and landscape features omitted from or beyond the scope of the plan. If this circumstance occurs, the location of the individual tree or landscape feature is estimated. The position of each tree is shown on the attached drawing no. 9393-D-AIA rev. B.

3.3 In order to provide a systematic, consistent and transparent evaluation of the trees included within this survey, they have been assessed and categorised in accordance with the method detailed in item 4.3 of *BS 5837:2012 "Trees in Relation to Design, Demolition and Construction - Recommendations"*. For further information, please see the attached Explanatory Notes.

3.4 The detailed assessment of each tree and its work requirements with priorities are listed in the attached Schedule of Trees.

3.5 Several items would benefit from tree surgery or additional investigation, be it for health and safety, cultural, aesthetic or structural reasons as detailed in the attached Schedule of Trees. Including the trees recommended for felling, the item requiring the **most urgent** intervention is as follows:

Within six months:

A001	Fell (advise landowner)

© 2023 Hayden's Arboricultural Consultants Limited

3.6 Over and above the general and prudent recommendation that all trees are inspected on an annual basis, the following item has been identified as requiring enhanced monitoring to assess any changes in faults and weaknesses etc as detailed in the Schedule of Trees:

T006	Monitor annually (bark inclusions).

3.7 In accordance with item 4.2.4 (c) of BS 5837:2012, the items inspected and detailed within this report have been selected for inclusion due to the likely influence of any proposed development on the trees, rather than strictly adhering to the curtilage of the site. However, it must be understood that there may be trees beyond the site and not included in this survey which may exert an influence on the development. Where works for cultural, health and safety, quality of life or development purposes have been recommended on trees outside the ownership of the site, these can only progress with the agreement of the owner except where it involves portions of the trees overhanging the boundary.

4.0 Arboricultural Impact Assessment

4.1 The Proposal

4.1.1 The proposal is to construct a new restaurant with associated drive through, parking and landscaping within the site's curtilage.

4.2 Access

4.2.1 Site access is unencumbered by the Root Protection Areas (RPA) of any trees to be retained. From a purely arboricultural perspective, it will not therefore be necessary to install a temporary load bearing road to protect tree roots.

4.3 Demolition

4.3.1 There is no demolition associated with this proposal.

4.4 Construction

4.4.1 Construction of the restaurant's foundations do not encroach within RPA of any trees to be retained. From an arboricultural perspective, no specialised construction or foundation techniques will therefore be required to protect tree roots. However, dependent on the soil type, species and topography, trees may have an influence on the soil beyond their calculated RPA. Given the proximity of the proposed construction to the trees to be retained, it is recommended that a Structural Engineer is consulted to assess the implications of the tree retention on the required foundation design.

4.4.2 Construction of the retaining wall's foundations do not encroach within the RPA of any trees to be retained. From an arboricultural perspective, no specialised construction or foundation techniques will therefore be required to protect tree roots. However, dependent on the soil type, species and topography, trees may have an influence on the soil beyond their calculated RPA. Given the proximity of the proposed construction to the trees to be retained, it is recommended that a Structural Engineer is consulted to assess the implications of the tree retention on the required foundation design.

© 2023 Hayden's Arboricultural Consultants Limited

4.4.3 Installation of new hard surfaces does not encroach within the RPA of any retained trees. From a purely arboricultural perspective, it will not therefore be necessary for these items to be of specialist design.

4.4.4 Excavation and soil re-modelling is not shown to encroach within the RPA of any retained trees. No adverse arboricultural implications are therefore expected.

4.5 Implications of Sloping Ground

4.5.1 The arboricultural implications of the proposed structures assume that level changes will not occur within the RPA of trees that are shown to be retained. On this site there is a slope and as such “cut and fill” operations are required. If these works cannot be excluded from the calculated RPA of retained trees, a reappraisal of the arboricultural implications will be required.

4.6 Requirement for Tree Barrier Fencing

4.6.1 Prior to the commencement of construction and immediately after the completion of the necessary tree work, protective fencing will be erected on site. This must be fit for purpose, in full accordance with the requirements of BS 5837:2012 and positioned as shown on the attached drawing no. 9393-D-AIA rev. B. Full details of fencing will be supplied by Hayden’s Arboricultural Consultants in the detailed Arboricultural Method Statement & Tree Protection Plan.

4.7 Compound

4.7.1 The site provides adequate internal space to locate a construction compound outside the RPA of any trees and landscape features that are to be retained.

4.8 Phasing

4.8.1 The proposal involves the integration of several aspects that affect tree protection (e.g. – but not exclusively – access, the installation of services and construction of retaining walls). For this reason, the project must be carefully phased to ensure the highest level of protection for retained trees. As part of the detailed Arboricultural Method Statement & Tree Protection Plan, Hayden’s Arboricultural Consultants will produce an in-depth phasing recommendation to cover the major operations on site as they affect retained trees.

4.9 Monitoring

4.9.1 In accordance with item 6.3 of BS 5837:2012, the site and associated development should be monitored regularly by a competent Arboriculturalist to ensure that the arboricultural aspects of the planning permission are complied with. As part of the detailed Arboricultural Method Statement & Tree Protection Plan, Hayden’s Arboricultural Consultants will produce an extensive auditable monitoring schedule to assess the progress of key site events/activities.

© 2023 Hayden’s Arboricultural Consultants Limited

4.10 Tree Surgery to Facilitate Proposed Development

4.10.1 In order to enable the proposed development it will be necessary to undertake the following tree surgery works to retained trees:

Feature No	Description of Works Required	BS Category*
G001	Tip back eastern aspect of crown as shown on drawing no. 9393-D-AIA rev. B to facilitate construction of the drive through and retaining wall.	C
T002	Tip back eastern aspect of crown as shown on drawing no. 9393-D-AIA rev. B to facilitate construction of the drive through and retaining wall.	C

4.11 Landscape Implications

4.11.1 In addition tree (T001) necessitating removal for health and safety reasons (as detailed in the attached Schedule of Works - Irrespective of Development), the item listed in the table below requires felling to permit the proposed development to proceed:

Feature No	Reason for Removal	BS Category*	Visual Amenity Assessment*
H002	Fell section shown on drawing no. 9393-D-AIA rev. B to facilitate construction of the site access.	C	Moderate

* Please see definitions in the Explanatory Notes attached to this report.

4.11.2 The removal of (T001) and (A001) has been recommended irrespective of the development proposals due to their impaired condition. These trees are located on neighbouring land and as such the relevant recommendations within this report relating to these trees should be forwarded to the landowner(s).

4.12 Post Development Implications

4.12.1 No adverse arboricultural implications are considered reasonably foreseeable for the trees that remain provided that the recommendations of this report are complied with in full.

4.12.2 Due to the dynamic nature of trees and their interaction with the environment, their health and structural integrity is liable to change over time. It is therefore recommended that all trees on or adjacent to the site be inspected on an annual basis.

4.12.3 As stated in BS 5837:2012, regular maintenance of newly planted trees is of particular importance for at least three years during the critical post-planting period and might, where required by site conditions, planning requirements or legal agreement, be necessary for five years or more. The designer of the new landscaping should therefore, in conjunction with the landscape design proposals, prepare a detailed maintenance schedule covering this period and appropriate arrangements made for its implementation.

© 2023 Hayden's Arboricultural Consultants Limited

5.0 Design Advice, Preliminary Arboricultural Method Statement & Tree Protection Plan

5.1 Securing of Tree Structure and Root Protection Areas (RPA)

5.1.1 The trees to be retained will be protected using stout barrier fencing erected in the positions indicated on the attached Preliminary Arboricultural Impact Assessment & Tree Protection drawing no. 9393-D-AIA rev. B. This fencing will be in accordance with the requirements of BS 5837:2012.

5.1.2 All fencing provided for the safeguarding of trees will be erected prior to any demolition or development commencing on the site, therefore ensuring the maximum protection. This fencing, which must have all weather notices attached stating “Construction Exclusion Zone – No Access” will be regarded as sacrosanct and, once erected will not be removed, or altered, without the prior consent of the LPA.

5.1.3 Where fencing is impractical, consideration must be given to other forms of effective above ground tree structure protection. An example of this would be a combination of Barksavers to secure the stems and a temporary load bearing surface to shield the ground.

5.2 Location of Site Office, Compound and Parking

5.2.1 The position of the office, compound and parking will be agreed in writing with the LPA prior to commencement of any permitted development works. Any proposed re-location of these items through the various phases of development will be agreed prior to re-siting with the LPA.

5.3 On Site Storage of Spoil and Building Materials

5.3.1 Prior to and during all construction works on site, no spoil or construction materials will be stored within the RPA of any tree on, or adjacent to the site, even if the proposed development is to be within the RPA. This is to reduce to a minimum the compaction of the roots of the trees. Details of the RPA for each tree where no spoil or building materials will be stored are indicated on the attached Preliminary Arboricultural Impact Assessment & Tree Protection drawing no. 9393-D-AIA rev. B.

5.3.2 Any facilities for the storage of oils, fuels or chemicals shall be sited on impervious bases and surrounded by impervious bund walls. The volume of the bund compound shall be at least equivalent to the capacity of the tank plus 10%. If there is a multiple tankage, the compound shall be at least equivalent to the capacity of the largest tank, or the combined capacity of interconnected tanks, plus 10%. All filling points, vents, gauges and sight glasses shall be located within the bund. The drainage system of the bund shall be sealed with no discharge to any watercourse, land or underground strata. Associated pipework shall be located above ground and protected from accidental damage. All filling points and tank overflow pipe outlets shall be detailed to discharge downwards into the bund.

5.3.3 All material storage facilities and work areas must consider the effects of sloping ground on the movement of potentially harmful liquid spillages towards or into protected areas.

© 2023 Hayden’s Arboricultural Consultants Limited

5.4 Programme of Works

5.4.1 All tree surgery works, once approved by the LPA, will be carried out prior to any other site works. Once completed, the proposed protective fencing will be erected. All of this will be carried out prior to commencement of any development works on the site. Outline details of the proposed programme are given in the Design and Construction and Tree Care flow chart attached (Appendix G-1).

5.5 Tree Surgery

5.5.1 All tree work will be agreed with the LPA and will be carried out in line with BS 3998:2010 (Recommendations for Tree Works). An appropriately qualified and insured arboricultural contractor will carry out the work. Any alterations to the proposed schedule of works will be agreed with the LPA prior to commencement of works.

5.6 Levels

5.6.1 Other than for any specific exception which may be referred to at item 4.0, no alterations to soil levels within the RPA of retained trees are envisaged. However, if it is necessary for these to occur, appropriate measures must be taken to prevent or minimise any detrimental effects on the affected root systems as detailed in 5.6.2 and 5.6.3 below.

5.6.2 If it is necessary to excavate so close to trees that roots greater than 50mm diameter are likely to be encountered, particular care will be taken to avoid damage. Excavation in these areas will be undertaken by hand or using an air spade, avoiding any damage to the bark. The roots will be surrounded with sharp sand prior to the replacing of any soil or other material in the vicinity.

5.6.3 If it is necessary to raise levels, it is essential that adequate supplies of water and oxygen pass through the soil to the trees' roots. Therefore, where necessary, a granular material will be used which will not inhibit gaseous diffusion. Possible options are no-fines gravel, cobbles or granite. All hard surfaces will be of suitable specification to allow such gaseous diffusion, e.g. brick pavers.

5.7 Services

5.7.1 At the time of writing this report, no details on proposed services were available. However, the following principles should be adhered to when planning for their installation.

5.7.2 It is proposed that all underground service runs will be placed outside the RPA of the trees on or adjacent to the site. Where it is not possible to do this, the proposed length infringing the RPA will be hand dug 'broken trenches' (NJUG 4 paragraph 4) to ensure the maximum protection of the trees' roots. The trenches may also be excavated using an air spade, or trenchless technology can be employed if this methodology is considered appropriate by the relevant service company (thus allowing services to pass below and through the roots without the need for traditional excavation). If it is necessary to cut any small roots as part of any of these processes, they should be severed in such a way as to ensure that the final wound is as small as possible and free from ragged, torn ends.

5.7.3 All routes for overhead services will aim to avoid the trees. Where this is not possible, any tree work will be agreed prior to commencement with the LPA.

© 2023 Hayden's Arboricultural Consultants Limited

5.7.4 All service providers (Statutory Authorities) will be consulted prior to commencement of works with the aim of minimising the number of service runs on the site.

5.7.5 All service runs/trenches where they encroach within the RPA of retained trees will be agreed with the LPA prior to commencement of works.

5.8 Construction within the Root Protection Area

5.8.1 If boundary fencing is to be erected within the RPA of retained trees, it is proposed that the fence posts will be secured using “Met-Posts” or similar design to keep the disturbance and damage of the roots of the trees to a minimum.

5.9 Reporting and Monitoring Procedures

5.9.1 In accordance with item 6.3 of BS 5837:2012, the site and associated development should be monitored regularly by a competent Arboriculturalist to ensure that the arboricultural aspects of the planning permission (e.g. the installation and maintenance of protective measures and the supervision of specialist working techniques) are implemented. Furthermore, regular contact between the Site Manager and the Arboriculturalist allows them to effectively deal with and advise on any tree related problems that may occur during the development process. This system should be auditable. Should any issues arise during the arboricultural monitoring of the development the Arboriculturalist will contact the LPA and appropriate action taken only with the prior permission of McDonalds Restaurants Limited and the LPA.

© 2023 Hayden’s Arboricultural Consultants Limited

6.0 Recommendations

6.1 It is recommended that the measures detailed in this report are implemented in full to provide retained trees with the highest level of protection during the process of construction.

6.2 It is recommended that in view of the siting and design of the layout, the lack of impact on trees and landscape features within the immediate vicinity, together with the detailed tree protection measures listed in this report, the trees should not be considered a constraint on the proposed development.

6.3 Subject to achieving Planning Permission, it is recommended that a detailed Arboricultural Method Statement & Tree Protection Plan should be provided. This will include the following: fencing type, service drawings, drainage proposals, access facilitation pruning specification, project phasing and an auditable monitoring schedule.

6.4 Tree surgery should be completed as detailed in the Schedule of Trees. Where this has been identified for reasons other than to permit development, this work should be completed within the advised timescales irrespective of any development proposals.

6.5 The tree surgery works proposed as part of this survey are recommended to mitigate any identified problems that may be caused by trees near the proposed development. To this end, should these recommendations be overruled, this survey stands as the opinion of Hayden's Arboricultural Consultants Limited and therefore any damage or injury caused by trees recommended by this practice for felling or tree surgery works, to which the proposed schedule of works has been altered or the tree has been requested to be retained by the LPA, cannot be the responsibility of this practice.

© 2023 Hayden's Arboricultural Consultants Limited

7.0 Limitations & Qualifications

Tree inspection reports are subject to the following limitations and qualifications.

General exclusions

Unless specifically mentioned, the report will only be concerned with above ground inspections. No below ground inspections will be carried out without the prior confirmation from the client that such works should be undertaken.

The validity, accuracy and findings of this report will be directly related to the accuracy of the information made available prior to and during the inspection process. No checking of independent third-party data will be undertaken. Hayden's Arboricultural Consultants Limited will not be responsible for the recommendations within this report where essential data are not made available or are inaccurate.

This report will remain valid for one year from the date of inspection subject to the recommendations specified within being adhered to. It must also be appreciated that recommendations proposed within this report may be superseded by extreme weather, or any other unreasonably foreseeable events.

However, if any additional alterations to the property or soil levels are carried out and/or further tree works undertaken other than specified within the report, it will become invalid and a new tree inspection strongly recommended.

It will be appreciated, and deemed to be accepted by the client and their insurers, that the formulation of the recommendations for the management of trees will be guided by the following: -

1. The need to avoid reasonably foreseeable damage.
2. The arboricultural considerations - tree safety, good arboricultural practice (tree work) and aesthetics.

The client and their insurers are deemed to have accepted the limitation placed on the recommendations by the sources quoted in the attached report. Where sources are limited by time constraints or the client, this may lead to an incomplete quantification of the risk.

Signed:



April 2023
For and on Behalf of Hayden's Arboricultural Consultants Limited

© 2023 Hayden's Arboricultural Consultants Limited

8.0 References

British Standards Institute. (2010). *Recommendations for Tree Work BS 3998:2010* BSI, London.

British Standards Institute. (2012). *Trees in Relation to Design, Demolition and Construction – Recommendations BS5837:2012* BSI, London.

Mattheck & Breloer, H. (1994). *Research for Amenity Trees No.4: The Body Language of Trees*, HMSO, London.

NHBC Standards (2007) *Chapter 4.2 'Building Near Trees'.* National House-Building Council.

NJUG 4 Guidelines for the planning, installation and maintenance of utility apparatus in proximity to trees. Issued 16 November 2007.

Patch, D. Holding, B. (2006) *Arboricultural Practice Note 12 (APN12)*, *Through the Trees to Development.* Arboricultural Advisory and Information Service (AAIS).

Lonsdale, D. (1999). *Research for Amenity Trees No 7: Principles of Tree Hazard Assessment and Management*, HMSO, London.

DEFRA (1997). *The Hedgerow Regulations 1997 – A Guide to the Law and Good Practice.* Department of the Environment, Transport and the Regions, HMSO, London.

Schwarze, F.W.M.R. Engels, J. & Mattheck, C. (2000) *Fungal Strategies of Wood Decay in Trees*. Springer.

Strouts, R.G. & Winter, T.G. (1994). *Research for Amenity Trees No.2: Diagnosis of Ill-Health in Trees*. Department of the Environment, HMSO, London.

Weber, K., Mattheck, C. (2003). *Manual of Wood Decays*. The Arboricultural Association.

© 2023 Hayden's Arboricultural Consultants Limited

9.0 Appendices

Appendix	**A**	Species List & Tree Problems
Appendix	**B**	Schedule of Trees
Appendix	**C**	Schedule of Works - Irrespective of Development
Appendix	**D**	Preliminary Schedule of Works to Allow Development
Appendix	**E**	Explanatory Notes
Appendix	**F**	Tree Preservation Order Enquiry/Response
Appendix	**G**	Advisory Information & Sample Specifications

1. BS 5837:2012 Figure 1 - Flow Chart – Design and Construction & Tree Care
2. European Protected Species and Woodland Operations Checklist (v.4)
3. BS 5837:2012 Figure 2 - Default specification for protective barrier
4. BS 5837:2012 Figure 3 - Examples of above-ground stabilising systems

Appendix	**H**	Drawing no. 9393-D-AIA rev. B

© 2023 Hayden's Arboricultural Consultants Limited

Appendix A - Species List & Tree Problems

Species List:

Ash	*Fraxinus sp*
Cherry Plum	*Prunus sp*
Elder	*Sambucus sp*
Elm	*Ulmus sp*
European Lime	*Tilia sp*
Field Maple	*Acer sp*
Hazel	*Corylus sp*
Horse Chestnut	*Aesculus sp*
Pine	*Pinus sp*
Rowan	*Sorbus sp*

Tree Problems:

This gives a brief description of the problems identified in the attached Tree Survey.

Name: Deadwood	
Symptoms/damage type and cause:	This relates to dead branches in the crown of the tree. In most cases, this is caused by the natural ageing process of the tree or shading due to its proximity to neighbouring trees. However, in some situations, it may be related to fungal, bacterial or viral infection.
Consequence:	Depending upon the location and mass of dead wood removal of the affected tissue may be necessary to prevent harm to persons or property as the wood will become unstable as it decays and in some circumstances is likely to fall from the tree with little or no warning.
Control:	Detailed monitoring should be undertaken on those trees showing signs of excessive deadwood production to identify the underlying cause.
Species affected:	Most tree species.
Images:	 

© 2023 Hayden's Arboricultural Consultants Limited

Name: ***Hedera helix*** **(Ivy)**	
Symptoms/damage type and cause:	Ivy may grow to varying degrees on all areas of a tree from the base to the upper crown. It is possible that in doing so it will out-compete the host tree for available light thereby suppressing the host.
Consequence:	This is generally only harmful to the tree on already unhealthy specimens which may be constricted by large ivy stems around the trunk or may have their top growth suppressed by a mass of flowering shoots in the crown. Ivy can also mask potentially dangerous faults on a tree.
Control:	Ivy should only be removed if absolutely necessary because it provides abundant cover to wildlife and then by severing twice close to the ground and removing a length of stem thereby causing the gradual dying away of the aerial parts of the plant providing extended benefit to wildlife whist relieving the pressure on the tree.
Species affected:	Most trees can be affected.
Images:	 

Name: ***Ophiostoma novo-ulmi*** **(Dutch Elm Disease)**	
Symptoms/damage type and cause:	The first symptom is the yellowing of the leaves from July onwards. It spreads rapidly often causing death in the same season - it is very rare for a tree to survive once the fungus has occurred. Dark brown streaks are evident when the bark and outer wood are peeled from the infected branches. Brown blotches may also be seen on infected branches if they are cut cleanly in a transverse section. The tree is infected by the Elm Bark Beetle which carries the disease (through fungal spores on their backs). Once active in the tree, the fungus produces yeast like cells in the wood which are transported within the trees water conducting tissues. These cause blockages of the tissue and hence both the wilting of the leaves and the brown staining of the infected wood mentioned above. Galleries (tunnels) can be found between the bark and the wood where the beetles have fed and laid their eggs. The beetles eat through the bark of stems and larger limbs and thus form emergence holes which contribute to disease identification.
Consequence:	This is the most serious disease in Elm trees and is still common in Britain. Infected trees decline and die rapidly.
Control:	Control by fungicidal injections has been successful in specimen trees of high value however the cost of this recurrent procedure usually outweighs the value of the affected tree.
Species affected:	*Ulmus* spp. and *Zelkova*

© 2023 Hayden's Arboricultural Consultants Limited

Appendix B

Schedule of Trees

SCHEDULE OF TREES (AIA) McDonald's, Hilperton Drive, Trowbridge,

Surveyed By: Nick Hayden Date: 04/03/2022
Managed By: Nick Hayden

TreeNo	Species	DBH	Height		Visual	Crown Spread	Problems / Comments	BS Cat	Work Required (TS)	Priority (TS)	Work Required (AIA)	Priority (AIA)
		Min Dist	Crown Base	Lowest Branch	Age	Water Demand						
On site		RPA (m^2)	Aspect	Aspect	SULE	Ground Cover						
A001	Ash, Elm	150	8		Low	N2.5, E2.5, S2.5, W2.5	Linear belt of Elm including a single Ash. Ivy clad. Many of the Elm are dead or in notable decline due to being infected with Dutch Elm Disease. Limited SULE. Structure directly to east of tree belt.	U	Fell (advise landowner)	2		
		1.8	0-2m		SM	Moderate						
No		10.2			<10 years	Ivy, Grass						
A002	Ash, Field Maple, Hazel, Lime, Pine, Rowan	250	11		High	N4, E4, S4, W4	Mixed species tree belt separating the main road from the residential development. Located on a mound. Contemporary with the adjacent development and considered likely to be part of the original landscaping scheme. As individuals, there are few trees of merit. However, collectively they form an important screen / wildlife corridor.	B2	No work required	4		
		3	0-2m		SM	High						
No		28.3			20+ years	Light undergrowth						
G001	4x Lime	50	5.5		Moderate	N3.5, E3.5, S3.5, W3.5	All topped at circa. 3.5m above ground level to ensure sufficient clearance of overhead power lines. Will require cyclical future management to ensure clearance maintained. An unremarkable feature.	C2	No work required	4	Tip back eastern aspect of crown as shown on drawing no. 9393-D-AIA rev. B to facilitate construction of the drive through and retaining wall.	0
		0.6	0-2m		SM	Moderate						
Yes		1.1			10+ years	Grass, Ivy, Light undergrowth						
G002	7x Lime	50	8		High	N3.5, E3.5, S3.5, W3.5	Located within the site's curtilage, with the exception of one tree. Tight unions with bark inclusions throughout crown but typical characteristic of species. Reasonable vigour. Would benefit from crown raising / formative pruning to prevent basal epicormic growth from maturing.	B2	Crown lift to 2.5m.	3		
		0.6	0-2m		SM	Moderate						
Yes		1.1			20+ years	Grass, Ivy, Light undergrowth						
H001	Elder, Elm	150	2		Moderate	N0.8, E0.8, S0.8, W0.8	Maintained boundary hedge.	C2	No work required	4		
		1.8	0-2m		EM	High						
No		10.2			10+ years	Grass, Light undergrowth						

TreeNo	Species	DBH	Height		Visual	Crown Spread	Problems / Comments	BS Cat	Work Required (TS)	Priority (TS)	Work Required (AIA)	Priority (AIA)
		Min Dist	Crown Base	Lowest Branch	Age	Water Demand						
On site		RPA (m^2)	Aspect	Aspect	SULE	Ground Cover						
H002	Ash, Cherry Plum, Elder, Elm	400	8		Moderate	N3.5, E3.5, S3.5, W3.5	Dense, mixed species unmanaged hedge. Ivy clad. Dead and dying Elm throughout and failed Cherry Plum stems. Most likely of good ecological value but of little arboricultural merit.	C2	No work required	4	Fell section shown on drawing no. 9393-D-AIA rev. B to facilitate construction of the site access.	0
		4.8	0-2m		M	High						
Yes		72.4			10+ years	Dense undergrowth						
T001	Elm	220	6.5		Moderate	N2, E2, S2, W2	Twin-stemmed. Dense Ivy impeded a detailed inspection of base and stems. Branchtip dieback in upper crown, most likely attributable to Dutch Elm Disease. Limited SULE. Not plotted on TOPO.	U	Fell (advise landowner)	3		
		2.64	0-2m		SM	High						
No		21.9			<10 years	Grass, Light undergrowth						
T002	Lime	270	8.5		High	N4, E4.5, S4, W4.5	Tight unions with bark inclusions throughout crown, however typical characteristic of species. Upper south west aspect of crown reduced back from overhead power lines. Will require cyclical future management to ensure sufficient clearance maintained. Crown displays reasonable vigour. Not plotted on TOPO.	C2	No work required	4	Tip back eastern aspect of crown as shown on drawing no. 9393-D-AIA rev. B to facilitate construction of the drive through and retaining wall.	0
		3.24	0-2m		SM	Moderate						
Yes		33			10+ years	Ivy, Light undergrowth						
T003	Horse Chestnut	300	7		Moderate	N3.5, E3.5, S3.5, W3.5	Multi-stemmed from circa. 2m above ground level, unions appear stable. Minor bark inclusions throughout crown. Crown displays reasonable vigour.	B2	No work required	4		
		3.6	0-2m		EM	Moderate						
Yes		40.7			20+ years	Grass, Light undergrowth						
T004	Horse Chestnut	320	7.5		Moderate	N4, E3.5, S4, W4	Multi-stemmed from circa. 2m above ground level, unions appear stable. Minor bark inclusions throughout crown. Crown displays reasonable vigour.	B2	No work required	4		
		3.84	0-2m		EM	Moderate						
Yes		46.3			20+ years	Grass, Light undergrowth						
T005	Horse Chestnut	290	7		Moderate	N4, E4, S3.5, W3.5	Multi-stemmed from circa. 2m above ground level, unions appear stable. Minor bark inclusions throughout crown. Crown displays reasonable vigour.	B2	No work required	4		
		3.48	0-2m		EM	Moderate						
Yes		38			20+ years	Grass, Light undergrowth						
T006	Horse Chestnut	350	7		High	N4, E4, S3.5, W4	Occluded seams and stem wounds. Multi-stemmed from circa. 2m above ground level, notable bark inclusions present. Reasonable vigour.	C2	Monitor annually (bark inclusions).	3		
		4.2	0-2m		EM	Moderate						
No		55.4			10+ years	Grass, Light undergrowth						

TreeNo	Species	DBH	Height		Visual	Crown Spread	Problems / Comments	BS Cat	Work Required (TS)	Priority (TS)	Work Required (AIA)	Priority (AIA)
		Min Dist	Crown Base	Lowest Branch	Age	Water Demand						
On site		RPA (m^2)	Aspect	Aspect	SULE	Ground Cover						
W001	Field Maple	250	10		Moderate	N3, E3, S3, W3	Dense, maturing Field Maple woodland. Individual trees of little merit, however collectively of importance.	B2	No work required	4		
		3	0-2m		SM	Moderate						
No		28.3			20+ years	Bare earth						
W002	Ash, Cherry Plum, Elder, Field Maple	250	12		Moderate	N3, E3, S3, W3	Dense, maturing mixed woodland. Individual trees of little merit, however collectively of importance. Failed specimens within.	B2	No work required	4		
		3	0-2m		SM	High						
No		28.3			20+ years	Bare earth						

Appendix C

Schedule of Works - Irrespective of Development

SCHEDULE OF WORK IRRESPECTIVE OF DEVELOPMENT

McDonald's, Hilperton Drive, Trowbridge,

Surveyed By: Nick Hayden
Surveyed: 04/03/2022
Managed By: Nick Hayden

Tree No.	Species	Work required	Priority
A001	Ash, Elm	Fell (advise landowner)	**2**
G002	7x Lime	Crown lift to 2.5m.	**3**
T001	Elm	Fell (advise landowner)	**3**

Schedule of Enhanced Monitoring

McDonald's, Hilperton Drive, Trowbridge,

Surveyed By: Nick Hayden
Surveyed: 04/03/2022
Managed By: Nick Hayden

Tree No.	Species	Work required	Priority
T006	Horse Chestnut	Monitor annually (bark inclusions).	**3**

Appendix D

Preliminary Schedule of Works to Allow Development

SCHEDULE OF WORKS (AIA)

McDonald's, Hilperton Drive, Trowbridge,

Surveyed By: Nick Hayden
Surveyed: 04/03/2022
Managed By: Nick Hayden

Tree No.	Species	Work required	Priority
G001	4x Lime	Tip back eastern aspect of crown as shown on drawing no. 9393-D-AIA rev. B to facilitate construction of the drive through and retaining wall.	**0**
H002	Ash, Cherry Plum, Elder, Elm	Fell section shown on drawing no. 9393-D-AIA rev. B to facilitate construction of the site access.	**0**
T002	Lime	Tip back eastern aspect of crown as shown on drawing no. 9393-D-AIA rev. B to facilitate construction of the drive through and retaining wall.	**0**

Appendix E

Explanatory Notes

Explanatory Notes

HAYDEN'S Arboricultural Consultants

Categories

Below is an explanation of the categories used in the attached Tree Survey.

No Identifies the tree on the drawing.

Species Common names are given to aid understanding for the wider audience.

BS 5837 Main Category Using this assessment (BS 5837:2012, Table 1), trees can be divided into one of the following simplified categories, and are differentiated by cross-hatching and by colour on the attached drawing:

Category A - Those of high quality with an estimated remaining life expectancy of at least 40 years;

Category B - Those of moderate quality with an estimated remaining life expectancy of at least 20 years;

Category C - Those of low quality with an estimated remaining life expectancy of at least 10 years, or young trees with a stem diameter below 150 mm;

Category U - Those trees in such condition that they cannot realistically be retained as living trees in the context of the current land use for longer than 10 years.

BS 5837 Sub Category Table 1 of BS 5837:2012 also requires a sub category to be applied to the A, B, C, and U assessments. This allows for a further understanding of the determining classification as follows:

Sub Category 1 - Mainly arboricultural qualities;

Sub Category 2 - Mainly landscape qualities;

Sub Category 3 - Mainly cultural values, including conservation .

Please note that a specimen or landscape feature may fulfil the requirements of more than one Sub Category.

DBH (mm) Diameter of main stem in millimetres at 1.5 metres from ground level. Where the tree is a multi-stem, the diameter is calculated in accordance with item 4.6.1 of BS 5837:2012.

Age Recorded as one of seven categories:

Y Young. Recently planted or establishing tree that could be transplanted without specialist equipment, i.e. less than 150 mm DBH.

S/M Semi-mature. An established tree, but one which has not reached its prospective ultimate height.

E/M Early-mature. A tree that is reaching its ultimate potential height, whose growth rate is slowing down but if healthy, will still increase in stem diameter and crown spread.

M Mature. A mature specimen with limited potential for any significant increase in size, even if healthy.

O/M Over-mature. A senescent or moribund specimen with a limited safe useful life expectancy. Possibly also containing sufficient structural defects with attendant safety and/or duty of care implications.

© 2020 Hayden's Arboricultural Consultants Limited

D Dead.

Height	Recorded in metres, measured from the base of the tree.
Crown Base	Recorded in metres, the distance from ground and aspect of the lowest branch material.
Lowest Branch	Recorded in metres, the distance from ground and aspect of the emergence point of the lowest significant branch.
Life Expectancy	Relates to the prospective life expectancy of the tree and is given as 4 categories: 1 = 40 years+; 2 = 20 years+; 3 = 10 years+; 4 = less than 10 years.
Crown Spread	Indicates the radius of the crown from the base of the tree in each of the northern, eastern, southern and western aspects.
Minimum Distance	This is a distance equal to 12 times the diameter of the tree measured at 1.5 metres above ground level for single stemmed trees and 12 times the average diameter of the tree measured at 1.5 metres above ground level tree for multi stemmed specimens. (BS 5837:2012, section 4.6).
RPA	This is the Root Protection Area, measured in square metres and defined in BS5837:2012 as "a layout design tool indicating the minimum area around a tree deemed to contain sufficient roots and rooting volume to maintain the tree's viability, and where the protection of the roots and soil structure is treated as a priority". The RPA is shown on the drawing.. Ideally this is an area around the tree that must be kept clear of construction, level changes of construction operations. Some methods of construction can be carried out within the RPA of a retained tree but only if approved by the Local Planning Authority's tree officer.
Water Demand	This gives the water demand of the species of tree when mature, as given in the NHBC Standards Chapter 4.2 "Building Near Trees".
Visual Amenity	Concerns the planning and landscape contribution to the development site made by the tree, hedge or tree group, in terms of its amenity value and prominence on the skyline along with functional criteria such as the screening value, shelter provision and wildlife significance. The usual definitions are as follows: Low — An inconsequential landscape feature. Moderate — Of some note within the immediate vicinity, but not significant in the wider context. High — Item of high visual importance.
Problems/ Comments	May include general comments about growth characteristic, how it is affected by other trees and any previous surgery work; also, specific problems such as deadwood, pests, diseases, broken limbs, etc.
Work Required (TS)	Identifies the necessary tree work to mitigate anticipated problems and deal with existing problems identified in the "Problems/comments" category.

© 2020 Hayden's Arboricultural Consultants Limited

Work Required (AIA)	Identifies the tree work specifically necessary to allow a proposed development to proceed.
Priority	This gives a priority rating to each tree allowing the client to prioritise necessary tree works identified within the Tree Survey. **1** Urgent – works required immediately; **2** Works required within 6 months; **3** Works required within 1 year; **4** Re-inspect in 12 months, **0** Remedial works as part of implementation of planning consent.

© 2020 Hayden's Arboricultural Consultants Limited

BS 5837:2012 Terms and Definitions

Access Facilitation Pruning	One-off tree pruning operation, the nature and effects of which are without significant adverse impact on tree physiology or amenity value, which is directly necessary to provide access for operations on site.
Arboricultural Method Statement	Methodology for the implementation of any aspect of development that is within the root protection area, or has the potential to result in loss of or damage to a tree to be retained.
Arboriculturist	Person who has, through relevant education, training and experience, gained expertise in the field of trees in relation to construction.
Competent Person	Person who has training and experience relevant to the matter being addressed and an understanding of the requirements of the particular task being approached. *NOTE - a competent person is expected to be able to advise on the best means by which the recommendations of this British Standard may be implemented.*
Construction	Site-based operations with the potential to affect existing trees.
Construction Exclusion Zone	Area based on the root protection area from which access is prohibited for the duration of a project.
Root Protection Area (RPA)	Layout design tool indicating the minimum area around a tree deemed to contain sufficient roots and rooting volume to maintain the tree's viability, and where the protection of the roots and soil structure is treated as a priority.
Service	Any above or below ground structure or apparatus required for utility provision. **NOTE** - examples include drainage, gas supplies, ground source heat pumps, CCTV and satellite communications.
Stem	Principal above ground structural component(s) of a tree that supports its branches.
Structure	Manufactured object, such as a building, carriageway, path, wall, service run, and built or excavated earthwork.
Tree Protection Plan	Scale drawing, informed by descriptive text where necessary, based upon the finalized proposals, showing trees for retention and illustrating the tree and landscape protection measures.
Veteran Tree	Tree that, by recognized criteria, shows features of biological, cultural or aesthetic value that are characteristic of, but not exclusive to, individuals surviving beyond the typical age range for the species concerned. **NOTE** - these characteristics might typically include a large girth, signs of crown retrenchment and hollowing of the stem.

© 2020 Hayden's Arboricultural Consultants Limited

Appendix F

Tree Preservation Order Enquiry/Response

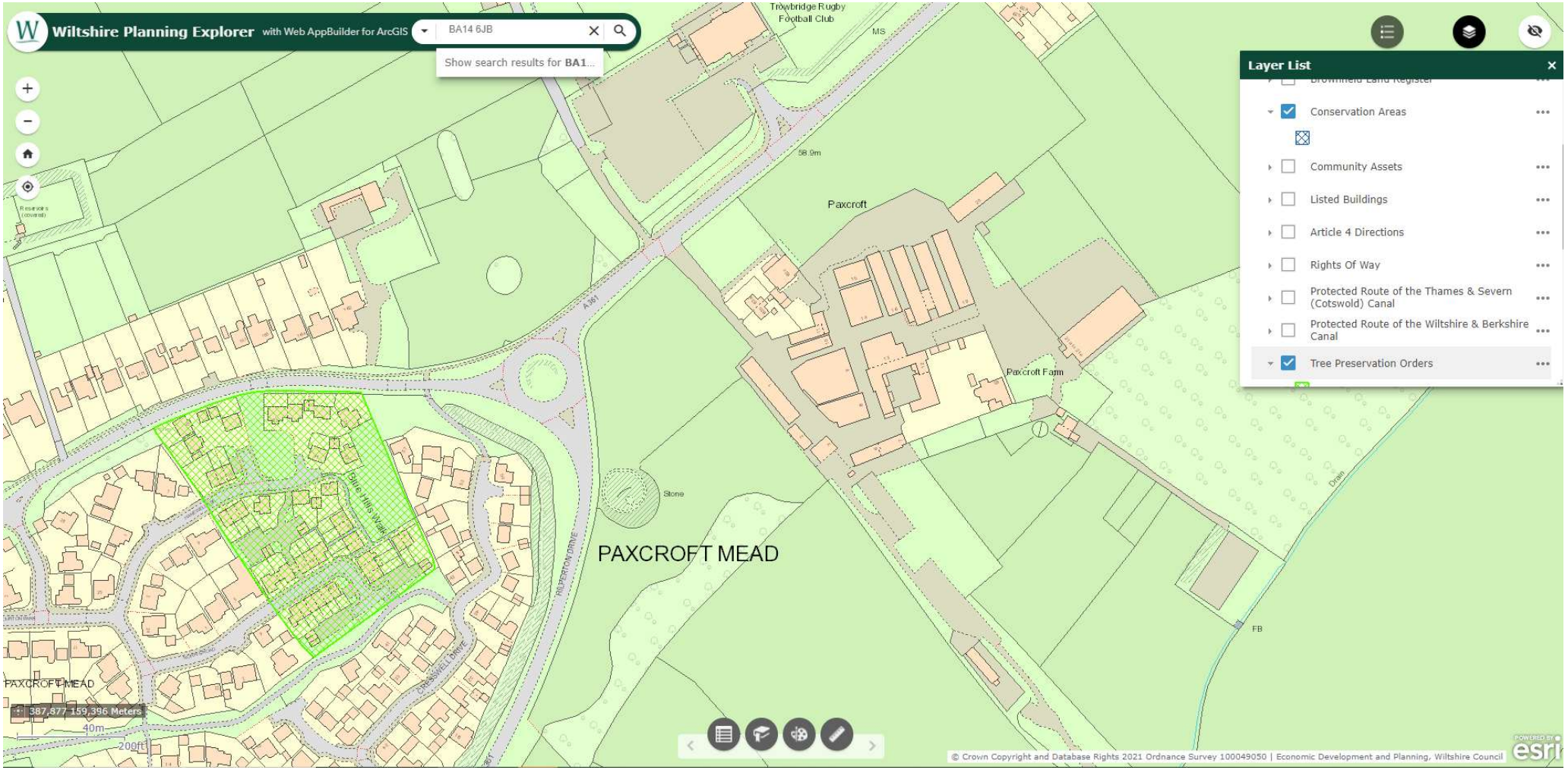
Wiltshire Planning Explorer with Web AppBuilder for ArcGIS
BA14 6JB
Show search results for BA1...
Layer List
Conservation Areas
Community Assets
Listed Buildings
Article 4 Directions
Rights Of Way
Protected Route of the Thames & Severn (Cotswold) Canal
Protected Route of the Wiltshire & Berkshire Canal
Tree Preservation Orders
Trowbridge Rugby Football Club
Paxcroft
Paxcroft Farm
Stone
PAXCROFT MEAD
PAXCROFT MEAD
387,877 159,396 Meters
40m
200ft
© Crown Copyright and Database Rights 2021 Ordnance Survey 100049050 | Economic Development and Planning, Wiltshire Council

Appendix G

Advisory Information & Sample Specifications

1. BS 5837:2012 Figure 1 - Flow Chart – Design and Construction & Tree Care

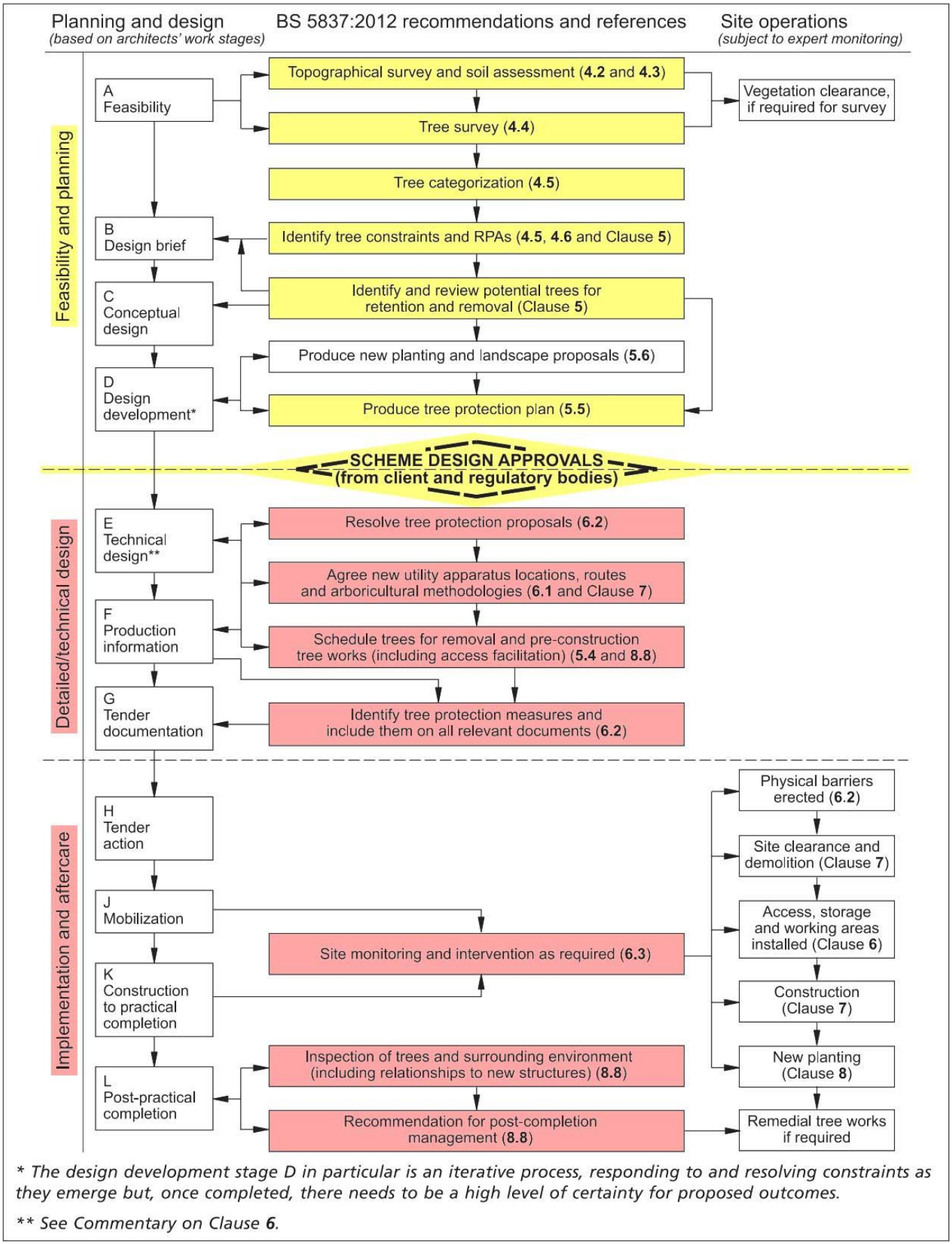

** The design development stage D in particular is an iterative process, responding to and resolving constraints as they emerge but, once completed, there needs to be a high level of certainty for proposed outcomes.*

*** See Commentary on Clause **6**.*

2.

European Protected Species and woodland operations. (V4)

Complete all sections of the Checklist

✔

Checklist

1 **Are you within, or close to, the known mapped range of any of the protected species OTHER THAN BATS which are potentially everywhere? Tick any that apply.**
See distribution maps in the Good Practice Guidance for each species -

- ☐ Dormice
- ☐ Otters
- ☐ Great crested newts
- ☐ Sand lizards
- ☐ Smooth snakes

YES / NO

2 **Does your wood contain any of the following habitats? Tick any that apply.**

- ☐ Old trees with holes and crevices which might be used bats
- ☐ Species rich scrub/coppice, early growth stage plantations and forest interfaces
- ☐ Rivers on which otters might be found
- ☐ Ponds which might be occupied by great crested newts
- ☐ Open areas on heathy soils

YES / NO

3 **Have any of the protected species been recorded in this wood or on adjoining sites? Tick any that apply.**
Indicate which sources of information you have checked:

- ☐ National Biodiversity Network (www.nbn.org.uk)
- ☐ Local Biological Records Centre
- ☐ Local Wildlife Trust
- ☐ Other

Specify Other:

YES / NO

4 **Have your inspections or any expert surveys found any of the following signs or evidence? Tick any that apply.**

- ☐ Signs (e.g. otter spraint, nuts gnawed by dormice, leaves folded by newts)
- ☐ Sightings (or echo-location)
- ☐ Potential breeding or roosting sites (e.g. veteran trees, old trees with crevices, riverside hollow trees, ponds, timber stacks, large fallen deadwood)
- ☐ Confirmed breeding or roosting sites (i.e. evidence of sites actually being used)

Details:

YES / NO

Details

Name of Wood:

Grid Reference:

Area: (ha) .

Date of Assessment:

Name of Assessor:

CHECK POINT

If you have answered NO to ALL of the above then only bats need to be considered in your operations.

If you have answered YES to any of the above then the species concerned must be considered as well as bats.

Notes

5 **Do the operations comply with Good Practice for bats and any other species found (or likely to be found in your wood) or can the operations be modified to do so?**
Details: Use reverse of form to expand as required:

YES — A licence is not required but continue to sections 6 and 7 below

NO — You will need to obtain a licence BEFORE carrying out the work (see EPS Licence Application Forms and Notes)

6 **Whether or not a licence is required...**
Has the information been communicated to operators (including the location of breeding sites and sensitive areas)? Tick any that apply.

- ☐ Included in documentation (e.g. contract, letter of instruction, site assessment or other management plan)
- ☐ Shown to operators and/or their supervisor
- ☐ Marked with paint or hazard tape
- ☐ Shown on the site plan

Other means:

YES

NO — You may commit an offence if you do not tell your operators about the protected species in your wood.

7 **Have arrangements for supervision been made to ensure Good Practice guidance is complied with during the operations?**
Details:

YES

NO — You may commit an offence if you do not take steps to ensure that your operators comply with the Good Practice guidance.

3. BS 5837:2012 Figure 2: Default specification for protective barrier

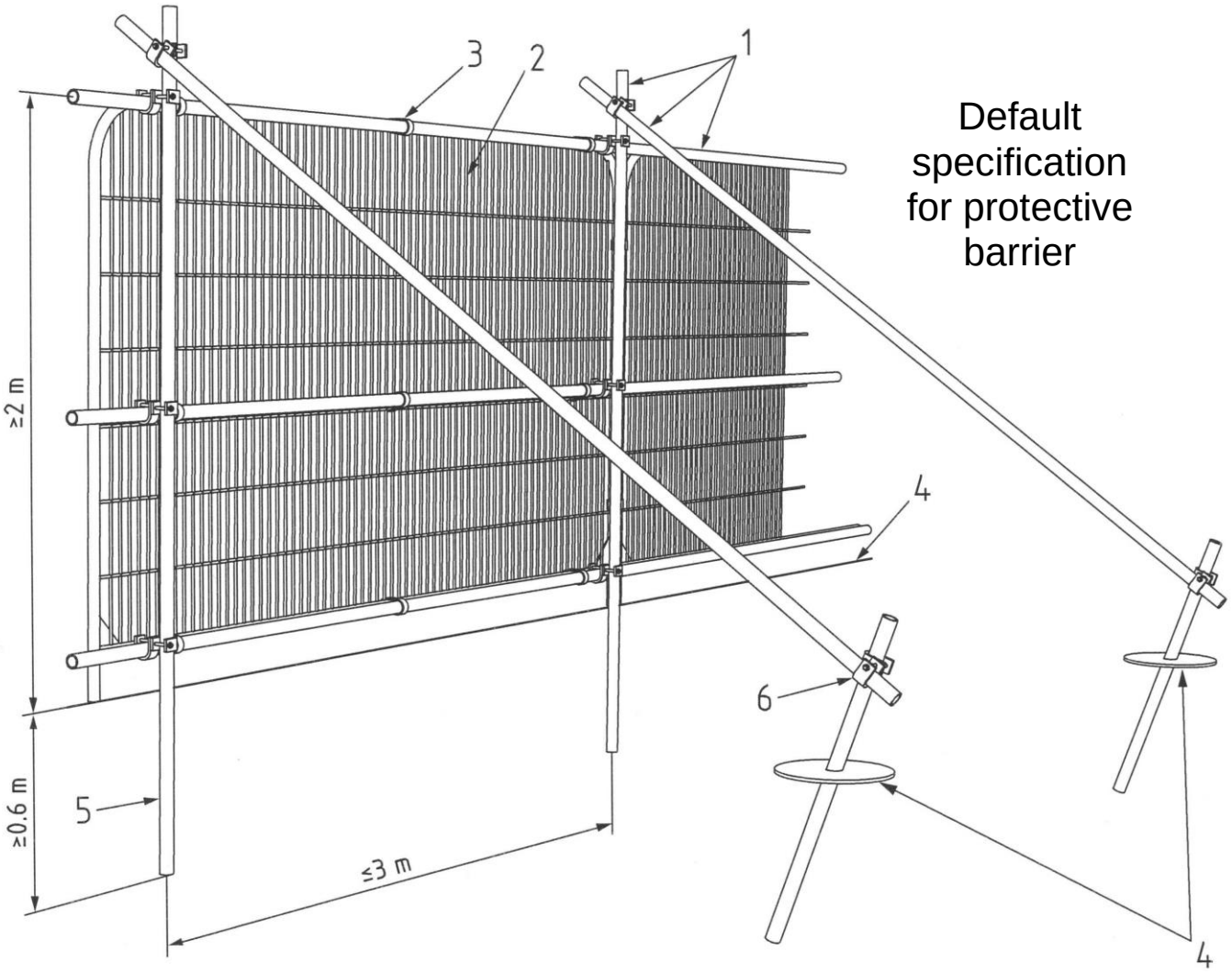

Key

1	Standard scaffold pole
2	Heavy gauge 2m tall galvanised tube and welded mesh infill panels
3	Panels secured to uprights and cross-members with wire ties
4	Ground level
5	Uprights driven into the ground until secure (minimum depth 0.6m
6	Standard scaffold clamps

4. BS 5837:2012 Figure 3: Examples of above-ground stabilizing systems

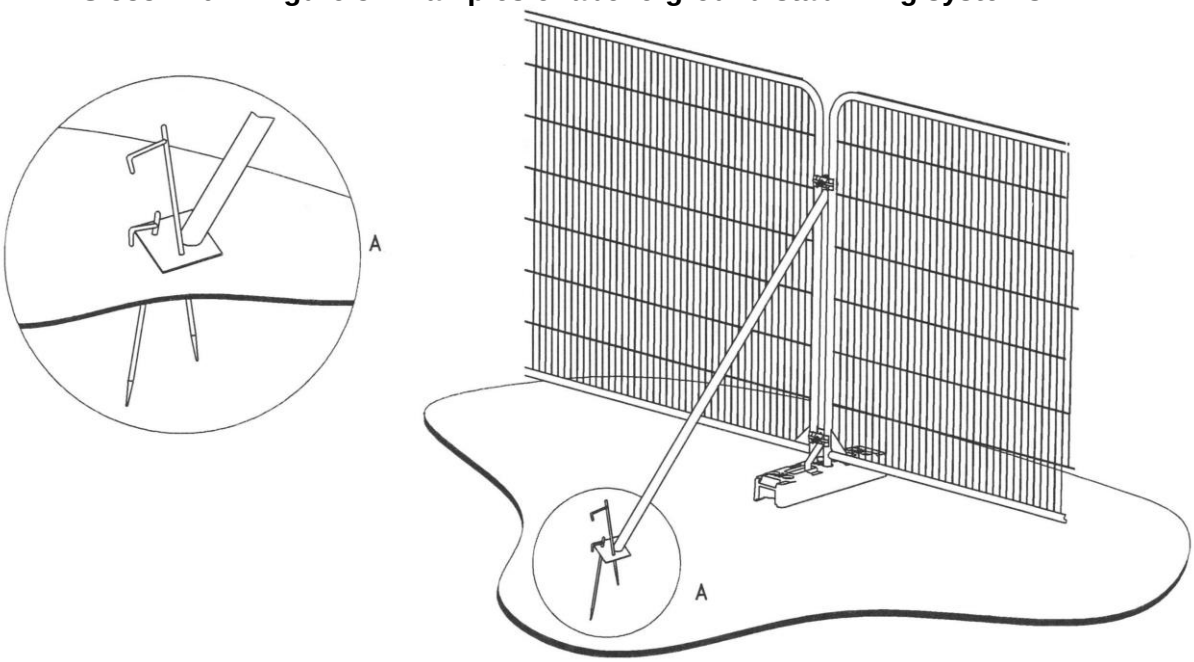

a) Stabilizer strut with base plate secured with ground pins

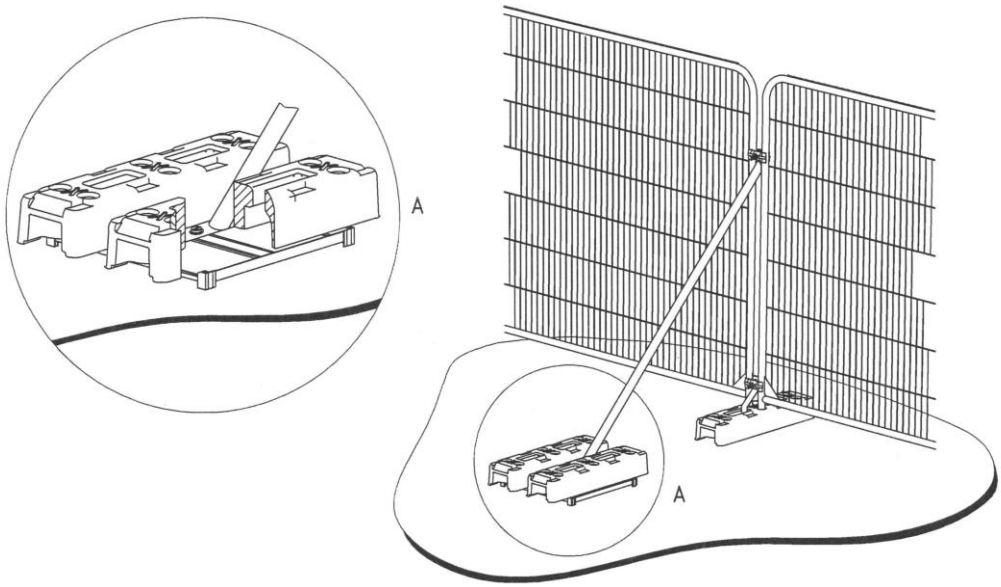

b) Stabilizer strut mounted on block tray

Appendix H

Hayden’s Drawing

- Arboricultural Impact Assessments
- Arboricultural Method Statements
- Tree Constraints Plans
- Arboricultural Feasibility Studies
- Shade Analysis
- Picus Tomography
- Arboricultural Consultancy for Local Planning Authority
- Quantified Tree Risk Assessment
- Health & Safety Audits for Tree Stocks
- Tree Stock Survey and Management
- Mortgage and Insurance Reports
- Subsidence Reports
- Woodland Management Plans
- Project Management
- Ecological Surveys

