0 100

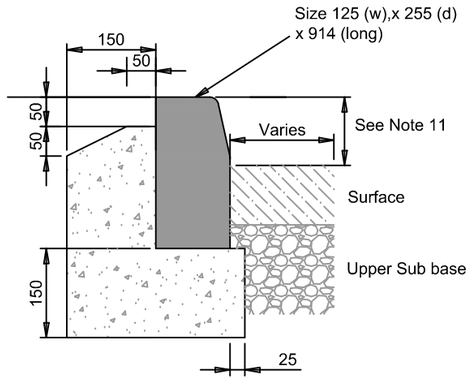

FULL HEIGHT KERB- TYPE HB2

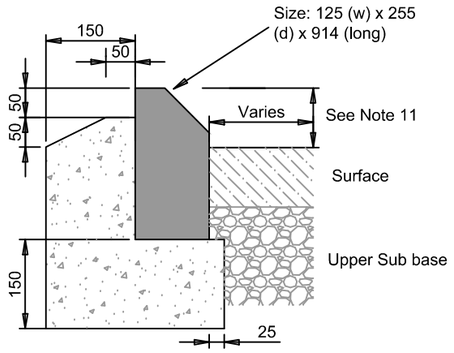

SPLAY KERB - TYPE SP

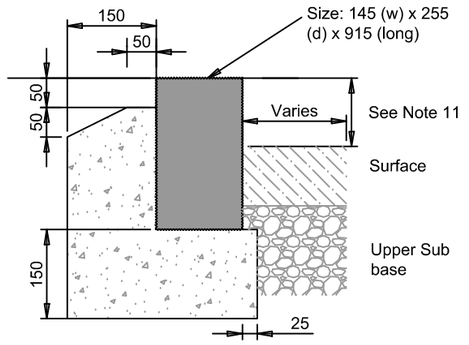

FULL HEIGHT KERB -
TYPE CONSERVATION

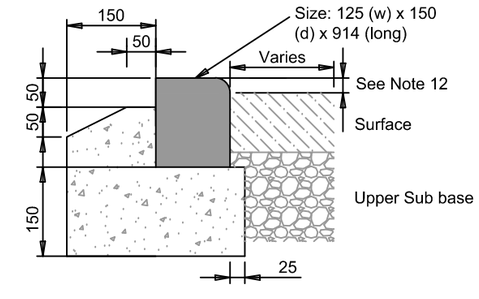

DROP KERB - TYPE BN

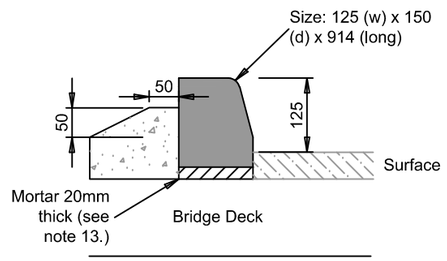

KERBS OVER BRIDGE DECKS - TYPE HB3

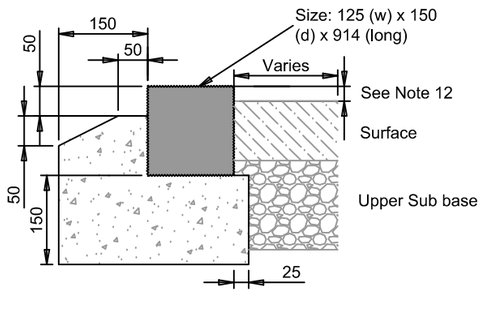

DROP KERB TYPE: CONSERVATION

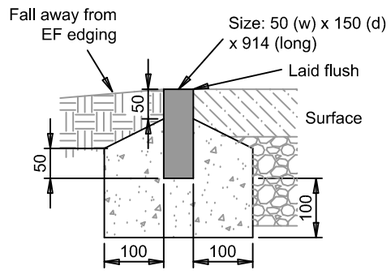

EDGING TYPE EF (FLAT TOP)

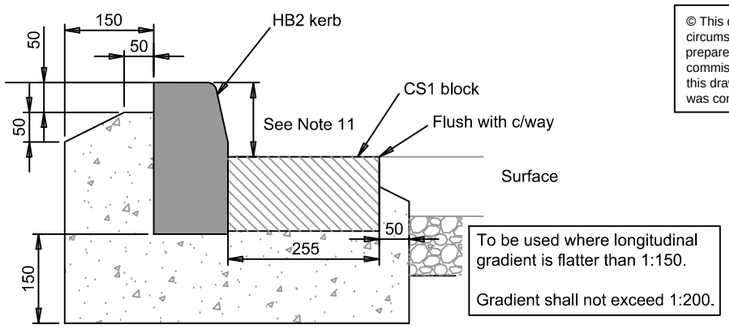

COMBINATION KERB - TYPE HB2+CS1

© This drawing is Copyright. It should not be relied on or used in circumstances other than those for which it was originally prepared and for which Wiltshire Council was originally commissioned. Wiltshire Council accepts no responsibility for this drawing to any party other than the person(s) by whom it was commissioned.

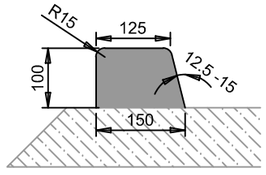

EXTRUDED ASPHALT KERB

NOTES

1. Do not scale from this drawing. All Dimensions in mm's
2. Kerbs to be butt jointed. Where kerb alignments incur 'minor open joint tapers' between formed surfaces mortar jointing shall be used as directed by engineer.
3. All full length Precast kerbs are to be mechanically handled.
4. All precast concrete Kerbs & Edgings shall be to BS EN 1340 & laid to BS 7533-6.
5. All setts of natural stone shall be to BS EN 1342 & laid to BS 7533-7.
6. All Kerbs & Edgings bed & backing to be Concrete Class ST1 (C6/8), well compacted. Unless otherwise stated this shall be a minimum bed thickness of 150mm.
7. The minimum length of any cut kerb shall be 450mm (Half kerb).
8. The correct radius kerbs shall be used for all radii of 12m or less. For radii between 12m and 20m 600mm long straight units shall be used. Radius kerbs shall be used to form corners of laybys and tapers.
9. Suitable transition kerbs shall be used for all drop kerb and upstand variation locations.
10. Suitable quadrant kerbs shall be used to form corners of square areas and refuge islands.
11. Kerb up-stand to be denoted on relevant engineering drawing
12. Drop kerb upstand shall be 0-6mm for pedestrian crossings, 25mm for vehicular crossings.
13. Mortar shall comply with S.H.W Clause 24014 designation (i)
14. Bond coat to Clause 920 shall be applied to c/way surface in accordance with BS434: Pt 2 prior to laying extruded asphalt kerb
15. The work shown on this drawing could affect statutory undertakers apparatus and the contractor is required to verify the location and depth prior to the commencement of work and take all precautions necessary when working in the vicinity of such apparatus. Utility Information is produced from a digital source and no guarantee can be given regarding its accuracy. It is the recipients responsibility to check the accuracy of measurements given. Should discrepancy occur please contact the issuing authority to seek clarification.
16. The use of this drawing does not absolve the client of their responsibilities under Health & Safety: The Construction (Design & Management) Regulations 2015

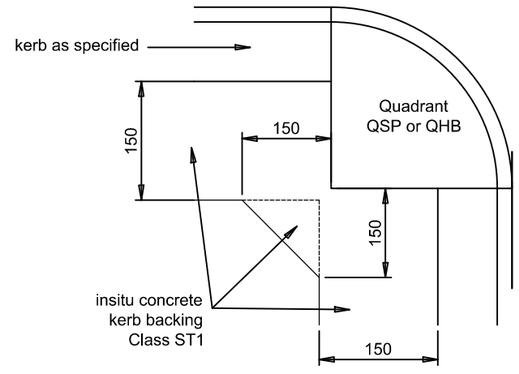

QUADRANT DETAIL- TYPE QHB /QSP

Rev	Revision details	Chkd	Appd	Date

Drawn: MJR
Checked: DMT
Approved: GTR
Date: 19/09/2016

DRAWING STATUS
ISSUE

File Ref: L:\L\Intergrated Transport Team\Standard Drawings\Highway Construction Drawings\Wiltshire Council Standard Drawings

Client: Wiltshire Council — Where everybody matters

Wiltshire Council
Highways & Transport
County Hall,
Bythesea Road
Trowbridge
Wiltshire
BA14 8JN

Consultant: ATKINS

Atkins Highways & Transportation
3rd Floor
County Gate
County Way
Trowbridge
Wiltshire
BA14 7FJ

Project Name:
WILTSHIRE COUNCIL - HIGHWAYS & TRANSPORT
STANDARD HIGHWAY CONSTRUCTION DETAILS

APPROVED
CONTRACTOR TO ENSURE LATEST DETAILS ARE USED

Drawing Title:
SERIES 1100 - KERBS, CHANNELS & PAVED AREAS
KERBS, CHANNEL & EDGINGS

Original Sheet Size : A3
Scale : NOT TO SCALE
Dimensions : mm
Drawing No. WC-HCD-1100-D001
Rev: 0