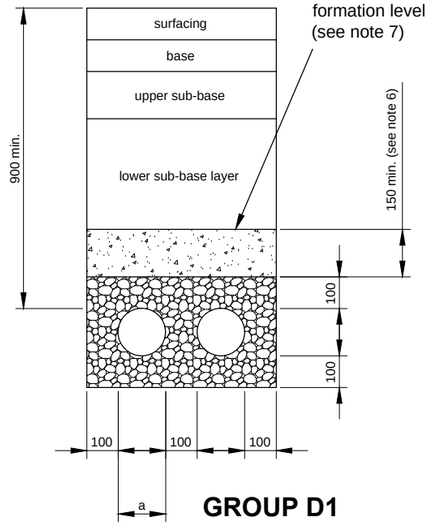

GROUP D1 (CARRIAGEWAY)

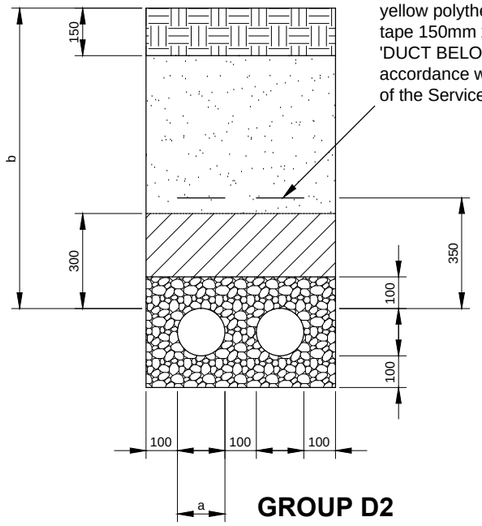

GROUP D2 (VERGE)

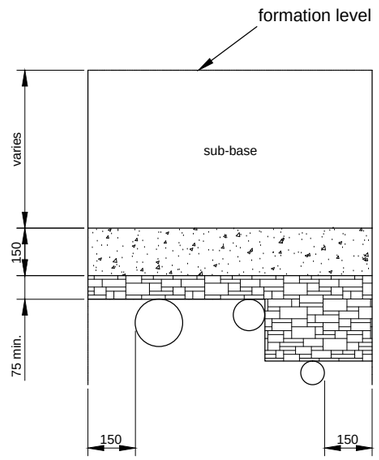

SERVICE PROTECTION UNDER CARRIAGEWAY

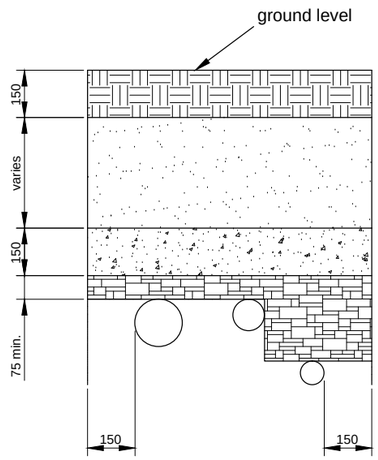

SERVICE PROTECTION UNDER VERGE

KEY

topsoil (where specified)

general fill material to S.H.W. Clause 505.2

Class 8 material to S.H.W. Clause 503.3(iv)

concrete to S.H.W. Clause 503.3(iii)

granular material to S.H.W. Clause 503.3(i)

sand protection

NOTES

1. All dimensions are in millimetres unless stated otherwise.
2. Ducts shall be manufactured from vitrified clay, UPVC or a suitable alternative material specified by the relevant Service Authority.
3. Refer to Appendix 5/2 for details of permissible alternative materials.
4. Dimension 'a' represents the external diameter of the duct.
5. Dimension 'b' represents the minimum cover requirement of the relevant Service Authority. Dimension 'b' shall be no less than 450mm.
6. Concrete protection on Group D1 ducts shall extend up to formation level and achieve a minimum thickness of 150mm.
7. Upper sub-base shall be Type 1 Unbound Mixtures to S.H.W Clause 803, Type 2 Unbound Mixtures (if they contain at least 80% bituminous planings) to S.H.W Clause 804 or Type 3 (open graded) Unbound Mixtures to S.H.W Clause 805.
8. Where no lower sub-base layer is specified, the upper surface of concrete protection on Group D1 ducts shall be flush with sub-formation level.
9. Group D1 ducts shall extend to the edge of capping layer where no filter drain is specified, otherwise 500mm beyond the filter drain or to the back of footway (where specified), whichever is the greater dimension.
10. Refer to H.C.D. I1 for marker block details.
11. The minimum clearance between the outer surface of ducts and existing drains, service apparatus and the like shall be 100mm.

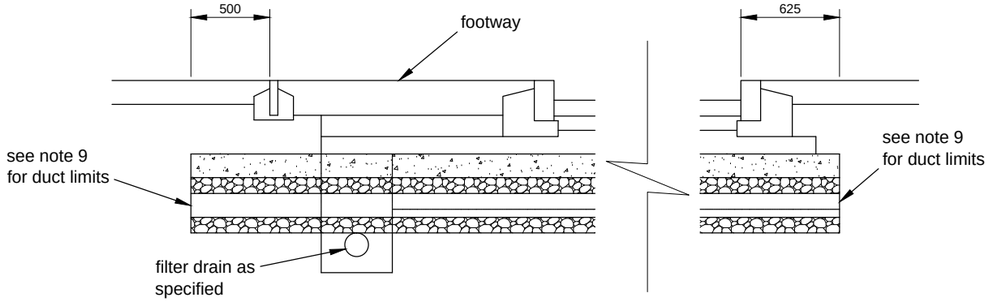

SECTION ALONG SERVICE DUCT

Rev	Revision details	Chkd	Appd	Date

Drawn: MJR
Checked: DMT
Approved: GTR
Date: 04/12/18

DRAWING STATUS
ISSUE

File Ref: L:/trafficengineeringteam/

Client: Wiltshire Council — Where everybody matters
Wiltshire Council
Highways & Transport
County Hall,
Bythesea Road
Trowbridge
Wiltshire
BA14 8JN

Consultant: ATKINS
Atkins Highways & Transportation
3rd Floor
County Gate
County Way
Trowbridge
Wiltshire
BA14 7FJ

Project Name:
WILTSHIRE COUNCIL - HIGHWAYS & TRANSPORT
STANDARD HIGHWAY CONSTRUCTION DETAILS

APPROVED
CONTRACTOR TO ENSURE LATEST DETAILS ARE USED

Drawing Title:
SERIES 500 DRAINAGE & SERVICE DUCTS
NEW SERVICE DUCTS & PROTECTION TO EXISTING SERVICES

Original Sheet Size : A3
Scale : NOT TO SCALE
Dimensions : mm
Drawing No. WC-HCD-500-D015
Rev: 0