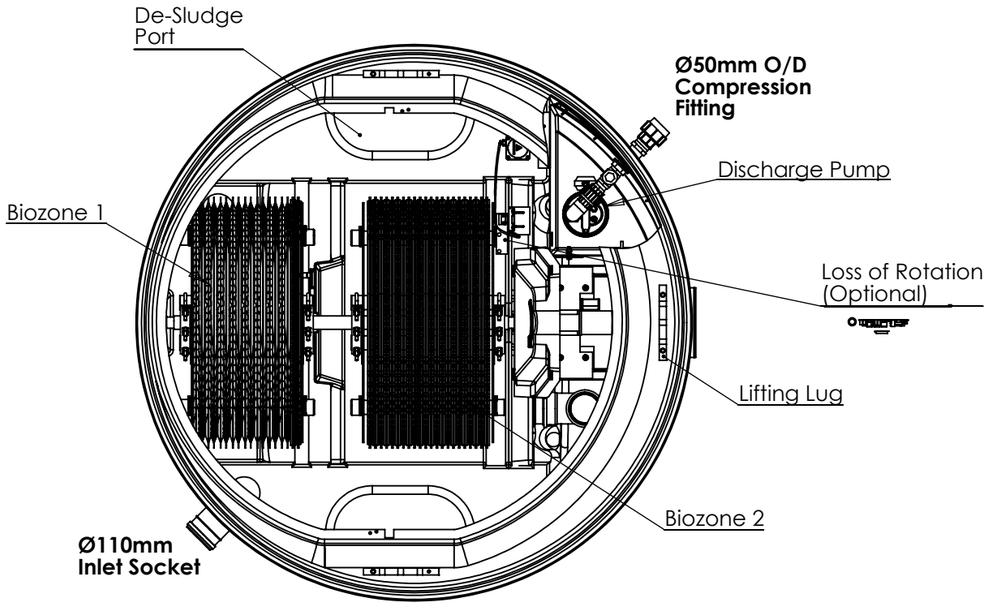

Notes:

1. This drawing is for 'Dimensional Information Only'. It is essential that this drawing is read in conjunction with the 'Installation Guidelines' supplied with the unit. (Copies available from our sales department).
2. BioDisc Tank & Cover are manufactured glass reinforced polyester (GRP). Cover is finished in Green to BS4800 Tint 18.B.25
3. For desludging procedure see Maintenance Handbook.
4. Electrical Supply - 240Volts, 2 Amps, Single Phase, Control Panel Supplied.
5. BioDisc must only be lifted by 3 lugs provided.
6. 3 no. Inlet Inverts available - 450mm, 750mm, 1250mm.
7. For Installation, Maintenance & Desludging details refer to GL0010P & GL0011P.
8. Cable Duct hole diameter in case to suit conduit to be used.

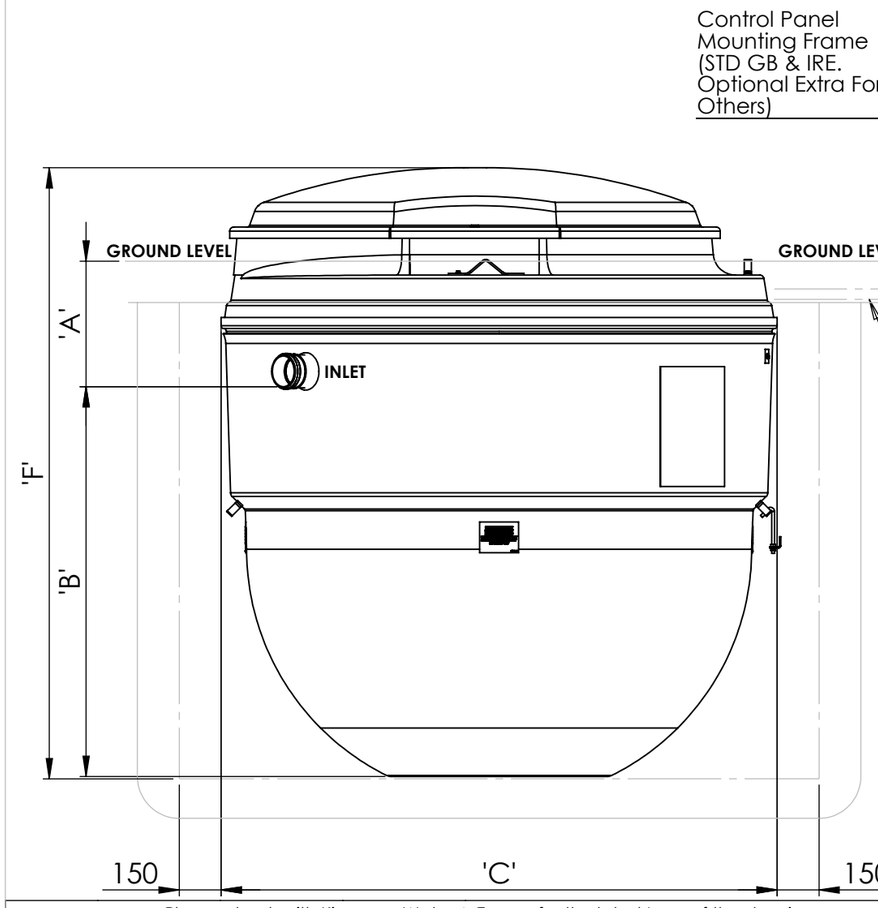

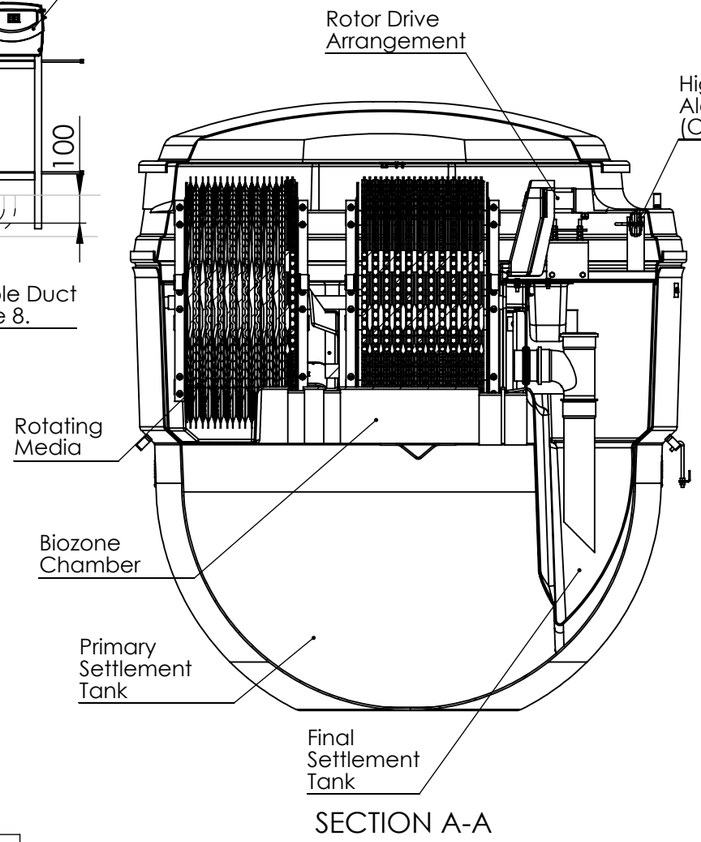

SECTION A-A

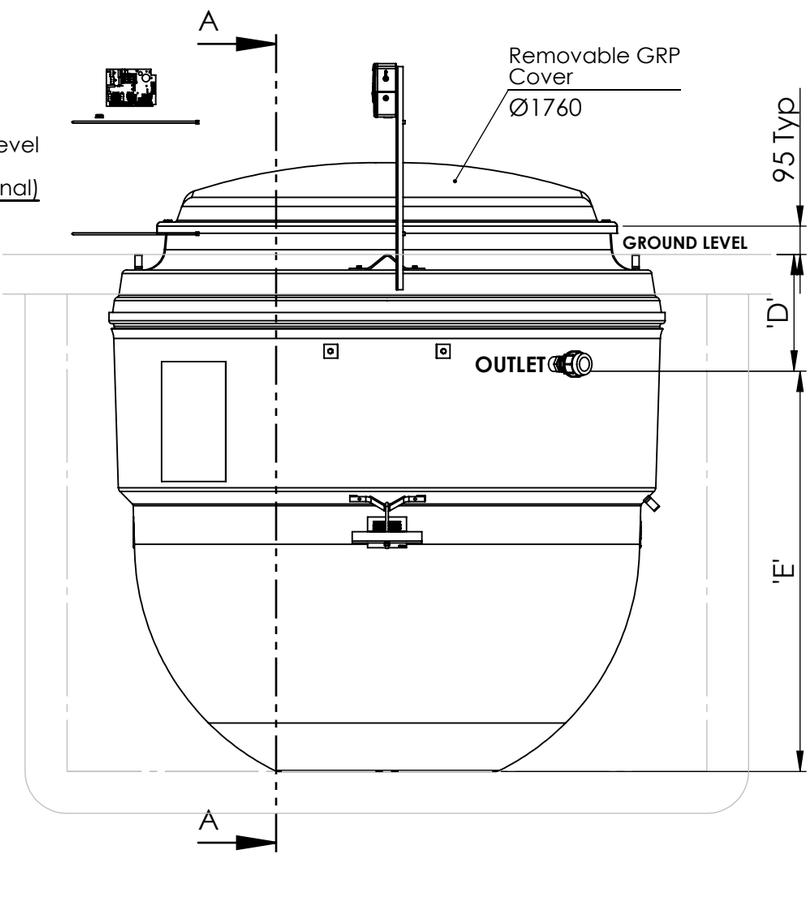

Please check with Kingspan Water & Energy for the latest Issue of the drawing				
Issue	Date	Drawn By	Approved By	Description
05	20/12/2022	TGY		ECN 1641 - Access Size Added
04	04/11/2015	L.Steward		CC1241 - Introduction Of 1.0m Invert For Europe/ ROW

LN Number :	Tolerance (unless stated) :
Finish :	Thickness : n/a
Weight : 573.98 Kg	Surface Area : m²
Modelled By : Name	Material : Various

Drawing : DS1147P Page 1 of 3

BA-BB-BAx BioDisc IPS Sales Drawing

All Dimensions In mm | Scale: Do Not Scale | Third Angle Projection

A:\Wastewater\Engineering\Drawing Data\02 - Sales Drawings\DS\DS - 11\DS1147P

Kingspan Water & Energy reserve the right to alter the details of this drawing without prior notice.
This drawing is copyright and may not be reproduced or used without the written permission of Kingspan Water & Energy

Kingspan

BA IPS BioDisc Dimension & Weight Chart

Unit Dimension Chart (IPS Systems).							
Dim 'A' (mm)	Dim 'B' (mm)	Dim 'C' (mm)	Dim 'D' (mm)	Dim 'E' (mm)	Dim 'F' (mm)	Dry Weight (Incl. Pallet) (Kgs)	Full Weight (Exclud. Pallet) (Kgs)
450	1400	1995	425	1425	2160	310	3290
750	1400	1995	425	1725	2460	325	3305
1250	1400	1995	425	2225	2960	380	3360

BAx & BB IPS BioDisc Dimension & Weight Chart

Unit Dimension Chart (IPS Systems).							
Dim 'A' (mm)	Dim 'B' (mm)	Dim 'C' (mm)	Dim 'D' (mm)	Dim 'E' (mm)	Dim 'F' (mm)	Dry Weight (Incl. Pallet) (Kgs)	Full Weight (Exclud. Pallet) (Kgs)
450	1400	1995	425	1425	2160	335	3315
750	1400	1995	425	1725	2460	350	3330
1250	1400	1995	425	2225	2960	405	3385

LN Number :	Tolerance (unless stated) :
Finish :	Thickness :
Weight :	Surface Area : m²
Modelled By :	Material :

Drawing : DS1147P

BA-BB-BAx BioDisc IPS Sales Drawing

All Dimensions In mm

Scale: Do Not Scale

Third Angle Projection

A:\Wastewater\Engineering\Drawing Data\02 - Sales Drawings\DS\DS - 11\DS1147P

Kingspan Water & Energy reserve the
right to alter the details of this drawing without prior notice.
This drawing is copyright and may not be reproduced or used without
the written permission of Kingspan Water & Energy

Kingspan

BA IPS BioDisc Dimension & Weight Chart (Europe & ROW Only)

Unit Dimension Chart (IPS Systems).							
Dim 'A' (mm)	Dim 'B' (mm)	Dim 'C' (mm)	Dim 'D' (mm)	Dim 'E' (mm)	Dim 'F' (mm)	Dry Weight (Incl. Pallet) (Kgs)	Full Weight (Exclud. Pallet) (Kgs)
1000	1400	1995	425	1975	2747	353	3333

BB IPS BioDisc Dimension & Weight Chart (Europe & ROW Only)

Unit Dimension Chart (IPS Systems).							
Dim 'A' (mm)	Dim 'B' (mm)	Dim 'C' (mm)	Dim 'D' (mm)	Dim 'E' (mm)	Dim 'F' (mm)	Dry Weight (Incl. Pallet) (Kgs)	Full Weight (Exclud. Pallet) (Kgs)
1000	1400	1995	425	1975	2747	378	3358

LN Number :	Tolerance (unless stated) :
Finish :	Thickness :
Weight :	Surface Area : m²
Modelled By :	Material :

Drawing : DS1147P

BA-BB-BAx BioDisc IPS Sales Drawing

All Dimensions In mm

Scale: Do Not Scale

Third Angle Projection

Kingspan Water & Energy reserve the
right to alter the details of this drawing without prior notice.
This drawing is copyright and may not be reproduced or used without
the written permission of Kingspan Water & Energy

Kingspan

A:\Wastewater\Engineering\Drawing Data\02 - Sales Drawings\DS\DS - 11\DS1147P