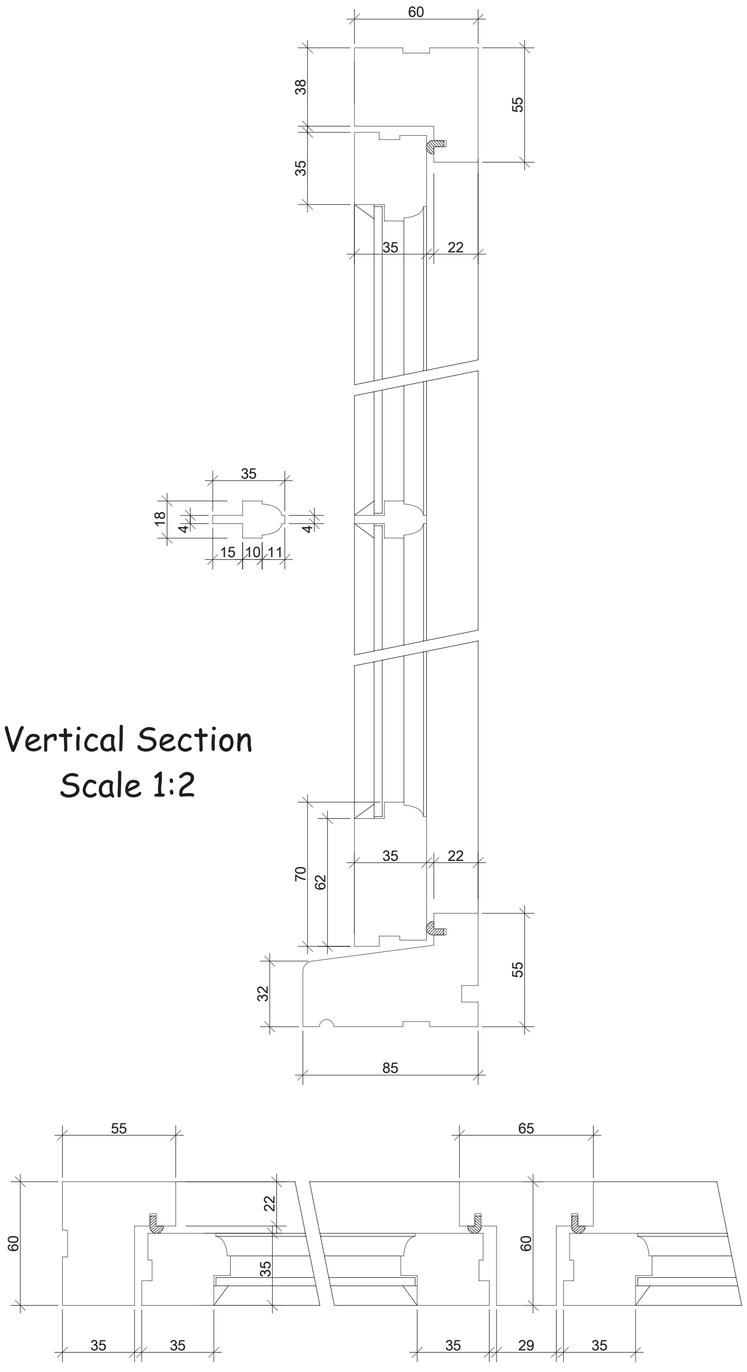

Vertical Section
Scale 1:2

Horizontal Section Scale 1:2

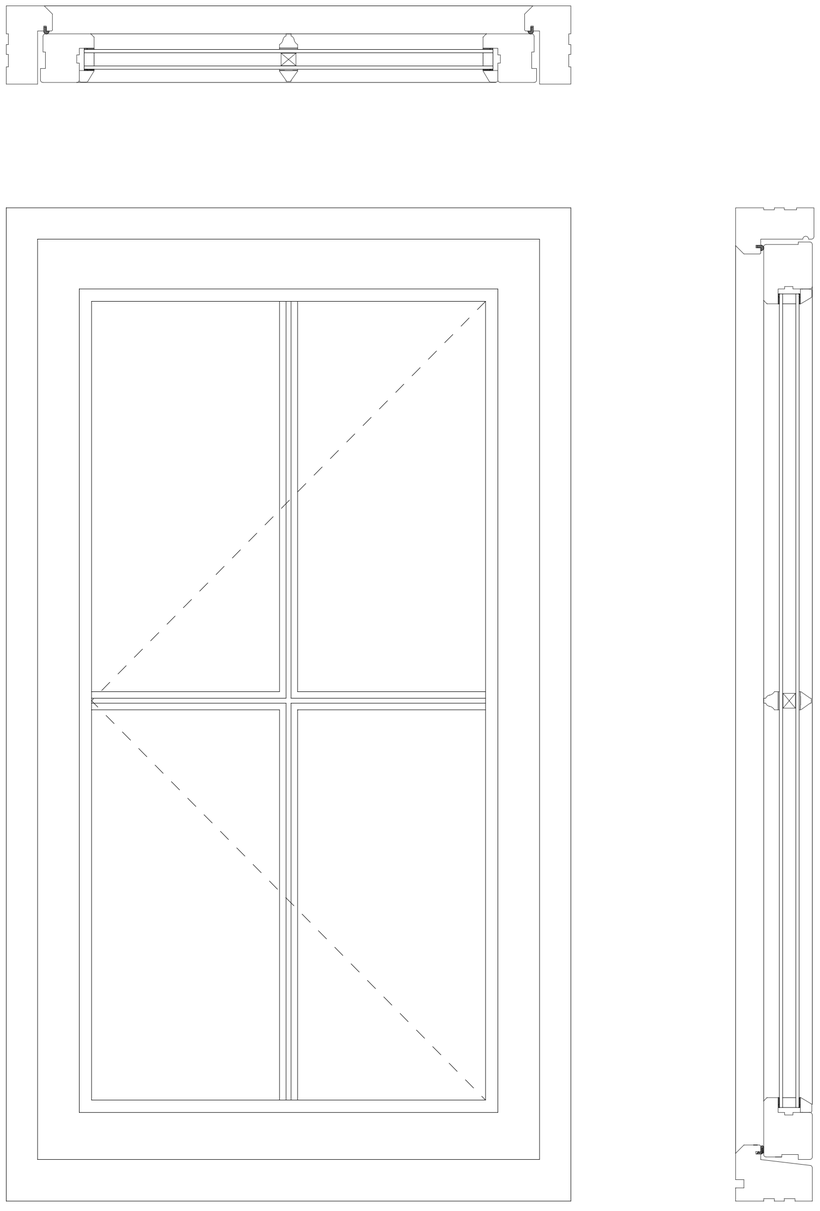

Proposed Windows Scale 1:5

0 100mm 200mm

0 250mm 500mm

DPO DESIGN

D Peter Oughtibridge

DPODESIGN.CO.UK

p.oughtibridge@btinternet.com

07748801306

Proposed garage conversion and alteration at :-
Rosefield Cottage, Polebarn Road, Trowbridge Wiltshire BA14 7EQ.

For:
Mr D Morelli

Drawing:
Proposed Joinery.

Scale:
1:5, 1:2 @ A2.

Date:
June 2023.

Drawing Number:
RCH - GP - 04.