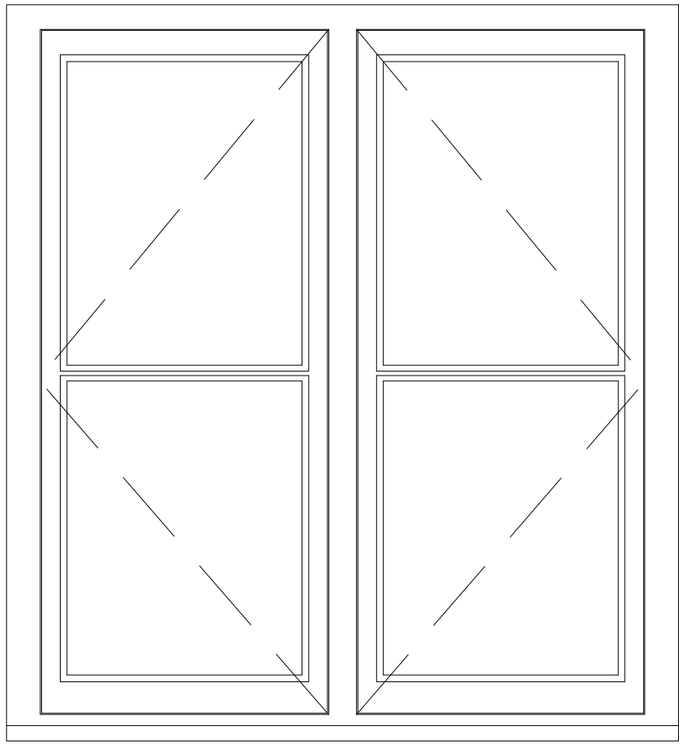

Window elevation 1:10

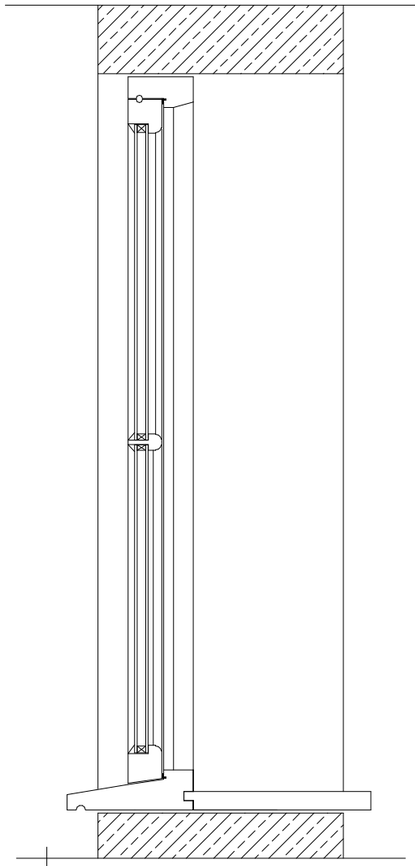

Window section 1:10

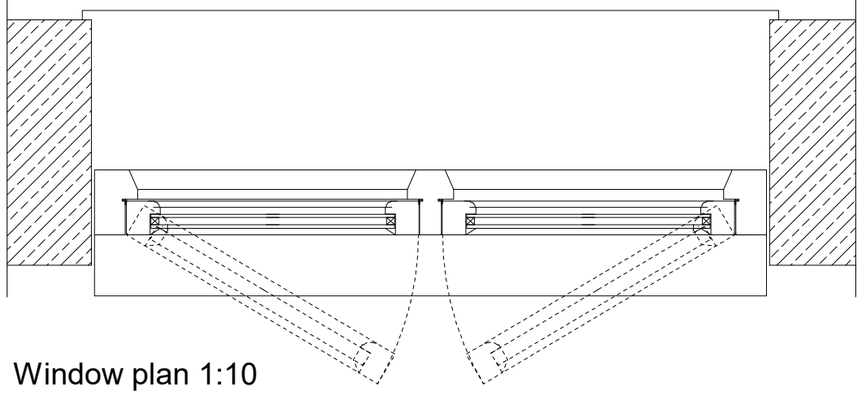

Window plan 1:10

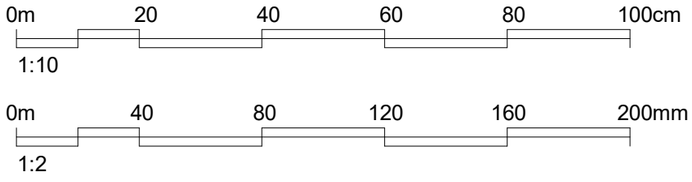

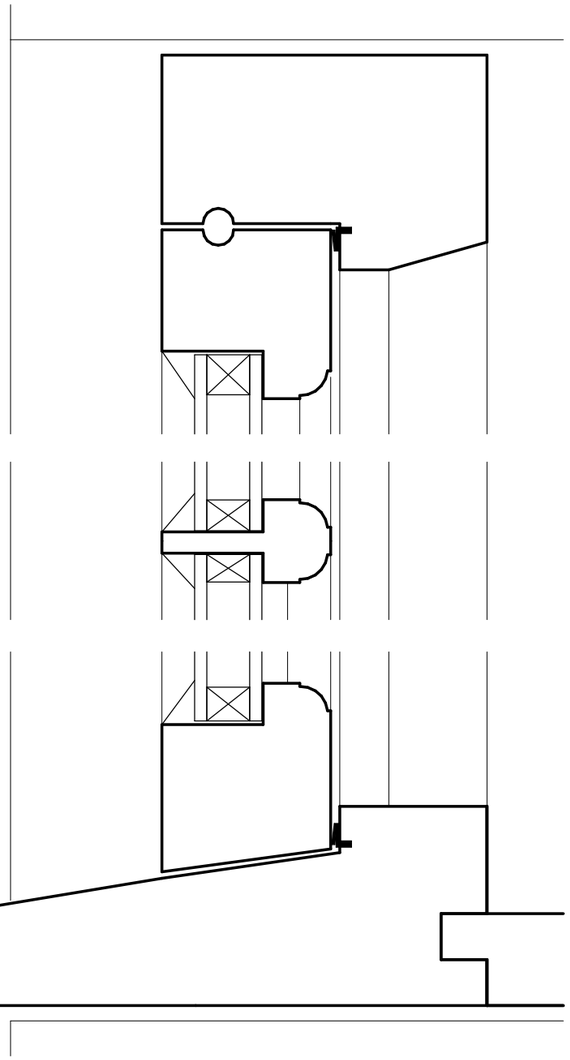

Window section detail 1:2

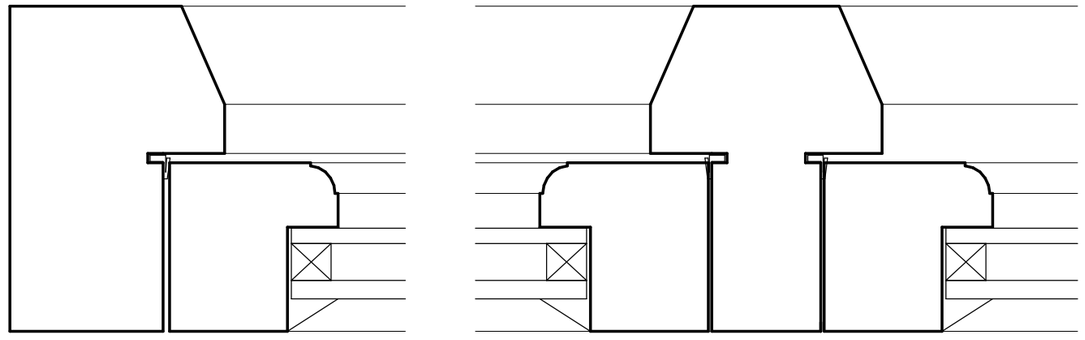

Window plan detail 1:2

Date	Rev.	Description
29.06.2023	1	First Issue
05.07.2023	2	Issued for planning

PROJECT	14 Ingram Street	REF	23001	DRAWING	1004	REV	2
TITLE	Proposed Window details			SCALE @ A3	As indicated		

AA alexisandreou@outlook.com