Client No: 15821/70075

MR & MRS HAYES

PRE-DEVELOPMENT TREE SURVEY, IMPLICATIONS AND PROTECTION REPORT

BROOK HILL HOUSE, BROOK HILL, SHERSTON, WILTSHIRE, SN16 0NQ

Unit 60 Aston Down, Frampton Mansell
Stroud, GL6 8GA
Tel: 01285 760466
Email: sales@treemaintenance.co.uk
www.treemaintenance.co.uk

Consulting Arborist Society.com PROFESSIONAL MEMBER

Institute of Chartered Foresters
Registered Consultant

CONTENTS

1.0 INTRODUCTION 3
2.0 SITE DESCRIPTION 4
3.0 TREE SURVEY INFORMATION 6
4.0 SOILS AND DRAINAGE 7
5.0 TREE CONSTRAINTS 8
6.0 PLANNING CONSIDERATIONS 9
7.0 WILDLIFE ISSUES 9
8.0 ARBORICULTURAL IMPLICATIONS 9
9.0 TREE PROTECTION MEASURES 11
10.0 LIMITATIONS 14
11.0 REFERENCES 16

APPENDIX 1. METHOD AND DEFINITIONS 17
APPENDIX 2. TREE SURVEY AND PROTECTION PLAN 15821/70075 22
APPENDIX 3. TREE PROTECTION SIGNAGE 21

© Tree Maintenance Limited 2023. Tel. 01285 760466. Email: sales@treemaintenance.co.uk

1.0 INTRODUCTION

1.1 I am Ken Sheppard, *MICFor, FArborA, Dip Arb (RFS), Tech Cert (ArborA), CUEW.* I am a senior Arboricultural Consultant with Tree Maintenance Limited. I have 37 years' experience in arboriculture; I am a Fellow of the Arboricultural Association and a Chartered Arboriculturalist through the Institute of Chartered Foresters. I am also a qualified Professional Tree Inspector as assessed by the industry lead body, Lantra.

1.2 In accordance with quotation 15821/69987, I have been instructed by Mr & Mrs Hayes of Brook Hill House, Brook Hill, Sherston, Wiltshire, SN16 0NQ to provide information in relation to the discharge of condition 5 of Planning Decision PL/2022/03706 dated 29th September 2022 and discussed with the Wiltshire Council Tree Officer Lisa Price in May 2023. It was agreed that the condition was overly extensive and generally unnecessary for a car port construction and that the following would be sufficient :

- Attend the above site and to carry out a tree survey in accordance with section 4.4 of British Standard 5837 Trees in relation to design, demolition and construction – Recommendations 2012 (BS 5837:2012).
- Using and relying upon the accuracy of the Existing and Proposed Block Plan. 2202/01, provide a Tree Survey and constraints information showing the position, crown spread, dimensions and grade of the offsite tree surveyed with the Root Protection Area (RPA) calculated, in accordance with section 5.2 British Standard 5837: 2012.
- Carry out an arboricultural implications assessment of the implications of the proposed double carport installation and make tree protection recommendations to ensure that the Council owned tree adjacent to the works is retained in a safe and healthy condition.
- Provide information in electronic format.

1.3 An explanation of the survey methodology and abbreviations is included at Appendix 1; the Tree Survey and Protection Plan is in Appendix 2, and included at Appendix 3 is signage for protective fencing which is to be installed prior to works commencing.

© Tree Maintenance Limited 2023. Tel. 01285 760466. Email: sales@treemaintenance.co.uk

2.0 SITE DESCRIPTION

2.1 The site is located on the southern outskirts of Sherston village on the south side of Brook Hill (B4040). It is a substantial, detached property with front and rear gardens falling away to the south and the river Avon (Figure 1 and 2).

2.2 The large Sycamore is a street tree, situated within the footpath to the north of the entrance gate (Figure 3). The drive and parking area has been built up and retained with a wall and is approximately a metre higher than the garden area to the west where the car port is proposed (Figure 4). There is a recently planted hedge along the top of the retaining wall, with the garden area laid to lawn below this.

Figure 1. Approximate site location (Google Earth 2023)



Figure 2. Approximate site outline (Google Earth 2022)



© Tree Maintenance Limited 2023. Tel. 01285 760466. Email: sales@treemaintenance.co.uk

Figure 3. Tree looking east up Brook Hill



Figure 4 Garden Area and Existing retaining Wall.



© Tree Maintenance Limited 2023. Tel. 01285 760466. Email: sales@treemaintenance.co.uk

3.0 TREE SURVEY INFORMATION

3.1 The tree is a mature Sycamore and is the only tree that could possibly be affected by the carport installation.

3.2 The Sycamore (*Acer pseudoplatanus)* is a mature specimen set within the footpath, which is being displaced, along with the front boundary dry stone wall of Brook House (Figure 5). The tree is 18 metres tall with a crown spread of 8 metres to the North and East, 9 metres to the south and 7 metres to the west. The crown height is 5 metres to the East, South and West and 6 metres to the North. It has a single trunk with a diameter of 660mm measured at 1.3 metres above ground level.

3.3 Both the general physiological and structural condition of the tree are considered good. The tree is growing on a bank with large buttress roots and small sucker growths on the south side. The trunk contains a number of fully occluded pruning wounds and appears free from decay.

3.4 The trunk has a diameter of 970mm, this provides a calculated root protection area of 425.65m^2 or a radius from the centre of the trunk of 11.64 metres.

3.5 No works are required at present, although consideration could be given to removing the minor deadwood as and when budgets allow.

Figure 5. Tree displacing footpath and boundary wall



3.6 The tree is considered to be of fair physiological and structural condition and has a life expectancy of more than 20- 40 years. It is graded as a ‘B’, a moderate quality tree.

© Tree Maintenance Limited 2023. Tel. 01285 760466. Email: sales@treemaintenance.co.uk

3.6 This is an offsite, boundary edge tree with an existing drystone wall to the south side. It is a prominent feature/ landmark tree within the village, especially if viewed when approaching the village from the south. It is growing on sloping ground with level changes, hard surfaces and service scars within its RPA. An overhead service runs through the crown on the north side. The tree is displacing both the private boundary wall and the adjacent footpath due to the development of large surface and buttress roots. There are pruning wounds on the trunk which have fully occluded with smaller higher more recent wounds partially occluded. There is epicormic growths on the trunk and throughout the crown possibly as a result of recent pruning and increased physiological stress. There is some minor deadwood within the crown, which has historically been pollarded but the crown has reformed. There is a potential cavity at 5m where previously pollarded. Cotoneaster and bramble are growing out of the main fork indicating at least some rooting potential with either organic material building up in the fork or cavity development from previous pruning works.

3.7 I would advise that Wiltshire Highways are notified of these observations as the responsibility for safety and damage remains with the owners and managers of the tree. As a minimum, the tree requires further detailed inspection to determine if the trunk is decaying from the old pruning wounds and if further works are required. These works should be carried out within 3 months. I suggest that the council is put on notice with regards damage to the boundary wall from trespassing roots as the damage will only get worse if the tree remains and continues to grow. This will eventually result in the need to demolish and rebuild the wall, a cost which the council will be responsible for if they fail to act to prevent the ongoing nuisance. Preventative works should be assessed and completed as soon as possible as damage is ongoing and progressive.

4.0 SOILS AND DRAINAGE

4.1 Careful consideration should be given to soil care and management within the RPA of retained trees and within areas of structural landscaping. Sudden changes in soil structure, pH (acidity/ alkalinity), nutrient availability and hydrology can have a catastrophic impact on the health and longevity of existing and newly planted trees. It is crucial to tree survival that soils are not impoverished or significantly altered. It is, however, possible to improve poor quality soils as part of the site works.

4.2 Basic soil information has been obtained using the Cranfield University web site and provides a broad overview of the soils within the general locality. Soil data © Cranfield University (NSRI) and for the Controller of HMSO 2014 www.landis.org.uk.

4.3 The soils are likely to consist of shallow lime-rich soils over chalk or limestone of moderate fertility.

4.4 At the time of the tree survey the site was free from areas of standing water/waterlogging.

4.5 As the soils are free draining, they will be prone to nutrient loss through leaching. Additional soil analysis would indicate if fertiliser applications would be beneficial for future plant establishment.

© Tree Maintenance Limited 2023. Tel. 01285 760466. Email: sales@treemaintenance.co.uk

4.6 As a minimum, soils should be handled and managed in accordance with BS 3882 Top Soil 2015 and DEFRA guidance Construction Code of Practice for Sustainable Use of Soils on Construction Sites 2009 (https://assets.publishing.service.gov.uk/government/uploads/system/uploads/attachment_data/file/716510/pb13298-code-of-practice-090910.pdf). It is advised that any imported soil has a certificate of compliance from the soil supplier.

5.0 TREE CONSTRAINTS

5.1 **Primary Constraints**.

5.1.1 Below ground constraints (Root Protection Areas (RPAs)) are shown on the Tree Survey and Protection Plan 15821/70075 Plan (Appendix 3). This is the minimum area which should remain undisturbed and protected from construction activity. At this stage it is represented as a circle centred on the trunk of each tree. As a default position, construction, services and working space should not be required within the RPAs of retained trees.

5.1.2 Subject to assessment by the project arboriculturalist, the shape of the RPA may be changed if adequate protection can be provided to the root system to meet the existing and long term biological requirements of the tree. Any new hard surfacing or structures should not generally exceed 20% of any unsurfaced ground within the RPA. Where hard surfacing or structures must be proposed within the RPA they should be designed to completely avoid or at least require minimal excavation. The RPA has already been compromised as a result of earlier construction of the drive access and retaining wall.

5.1.3 Foundation design has considered minimising root damage and compaction of the existing soft landscaped surface.

5.1.4 Where trees are to be retained as part of the new layout, all efforts should be made retain existing levels and avoid the installation of services within their RPAs. This would remove the additional cost of specialist installation methods and supervision during installation. Service installation, level changes and landscaping details within the RPA of retained trees require careful consideration, as the cumulative effects of seemingly minor construction operations can have a significant, detrimental effect on the health and longevity of retained trees.

5.2 Secondary Constraints

5.2.1 Although off site, it is recognised that the tree becomes colonised by aphids during the summer which deposit Honey Dew onto cars parked on the drive and is one of the reasons for constructing the carport.

© Tree Maintenance Limited 2023. Tel. 01285 760466. Email: sales@treemaintenance.co.uk

6.0 PLANNING CONSIDERATIONS

6.1 It has been confirmed by Wilshire Council that the tree is within Conservation Area. Six weeks written notification will need to be provided if it is intended to carry out more extensive works to the tree beyond those listed in this document. Once notice is given, the Council could either allow six weeks to elapse or serve a tree preservation order to prevent the works going ahead. If an order is served this will then require written consent to carry out works which can take up to 8 weeks for a decision to be issued. If the application is either refused or issued with unreasonable conditions the decision can be appealed to the planning inspectorate.

6.2 Several Acts and regulations are in force to control tree felling and loss of habitat with a comprehensive guide available at https://assets.publishing.service.gov.uk/government/uploads/system/uploads/attachment_data/file/876641/Tree_Felling_-_Getting_Permission_-_office_print_version.pdf . The guidance should be carefully considered if works are to be implemented prior to the granting and implementation of full Planning Consent.

7.0 WILDLIFE ISSUES

7.1 Birds. It is an offence under Section 1 of The Wildlife and Countryside Act 1981 (as amended) to kill, injure or take any wild bird; intentionally or recklessly disturb any wild bird or take, damage or destroy the nest of any wild bird while it is in use or being built. Therefore, work likely to disturb nesting birds should be avoided from late March to August.

7.2 All trees requiring work should be evaluated prior to work starting as part of a normal on-site risk assessment. If a bird or bat issue is suspected then the tree works will be suspended and further advice from our office should be sought.

8.0 ARBORICULTURAL IMPLICATIONS

8.1 Around 300m^2 of the calculated RPA is already compromised by existing structures and hard surfaces. The consented build would require regular trench fill foundations tangentially to the RPA and would result in further root loss. Fill placed within the structure would cover the ground more than a metre deep and result in significant and ongoing soil compaction. As a result, all efforts should be made to retain as much of the existing soft landscaping as possible along with the roots they contain.

8.2 Following discussion with the grounds works contractor, it has been agreed that only the rear wall will be constructed using trench fill foundations. This will run radially to the root protection area and minimise the damage caused. The car port slab, which will be engineer designed, will then be cast in situ between the new and existing walls creating a void beneath the carport, retaining the soft landscape area and preventing soil compaction whilst maintaining a healthy rooting environment (Figure 6 below)

© Tree Maintenance Limited 2023. Tel. 01285 760466. Email: sales@treemaintenance.co.uk

8.3 Excavation and build works could cause soil compaction - this will be prevented by using suitable ground protection and by storing all materials on the front drive until they are used.

8.4 The crown over the carport is currently too low to allow access for construction. It will therefore be necessary to raise the crown by removing three secondary pendulous branches back to the main scaffold limbs to provide building space and clearance of the completed structure. This is rather minor works and will have little impact on the health or longevity of the tree or the visual amenity it currently provides.

Figure 6 Sketch formation of supporting wall and slab

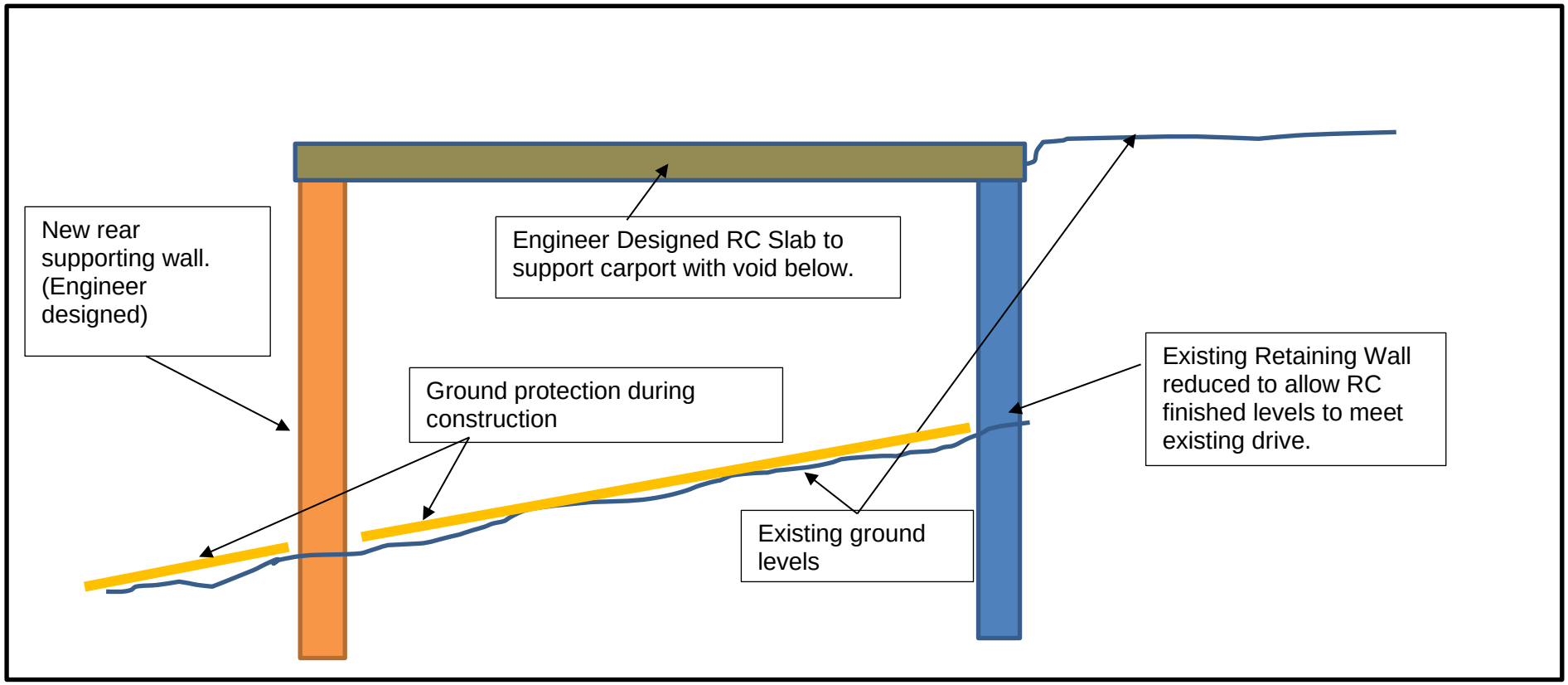

© Tree Maintenance Limited 2023. Tel. 01285 760466. Email: sales@treemaintenance.co.uk

9.0 TREE PROTECTION MEASURES

9.1 Pre-construction Works

9.1.1 A pre-commencement site meeting shall be held prior to any works commencing on site, to agree all approved processes with the Arboricultural Consultant and construction personnel. This meeting could be used to formally agree the methods of work, material storage, parking and tree protection measures prior to commencement of the development and the associated clearance work.

9.1.2 At the time of the meeting, points of contact and lines of communication will be established prior to commencement of the works on site. The contacts list will include:

- Arboricultural Consultant
- Wilshire Council's Tree Officer
- Wilshire Council's Planning Case Officer
- Site Supervisor and Foreman

9.1.3 All permitted or approved tree works shall be carried out to the highest standards, based on British Standard 3998:2010 'Recommendations for Tree Work' and current best practice. To ensure standards are met, it is recommended that a contractor from the Approved List of the Arboricultural Association be used (01242 522152 www.trees.org.uk). Under no circumstances shall site personnel undertake any tree pruning operations. All tree surgery works should be carried out prior to the erection of protective fencing and before site preparation works are started.

9.1.4 Consideration should be given to the timing of the proposed tree works to avoid the active growing period of trees. Therefore, work to retained trees should ideally be carried out during the dormant period from November through to February and then again from June to August. Consideration should also be given to nesting birds, and tree works should not normally be undertaken between March and May; however, care should be taken to inspect trees during the summer months for evidence of nesting birds.

9.1.5 Should additional tree works become apparent during the construction process, written consent will be required from Wiltshire Council prior to these additional works being undertaken.

9.2 Installation and Maintenance of Tree Protection

9.2.1 Fencing will be installed just prior to starting work. It will be installed as per the Tree Survey and Protection Plan (15821/70075). A copy of the Tree Survey and Protection Plan will be available on site as a point of reference for all site operatives.

9.2.2 The proposals will require low intensity activity and, as such, the barrier will comprise of weld mesh panels supported on concrete or rubber feet which are pinned to the ground. Panels will be braced and pinned at regular intervals to resist impacts (see Figure 7).

© Tree Maintenance Limited 2023. Tel. 01285 760466. Email: sales@treemaintenance.co.uk

Figure 7: Type 1 Protective Fencing

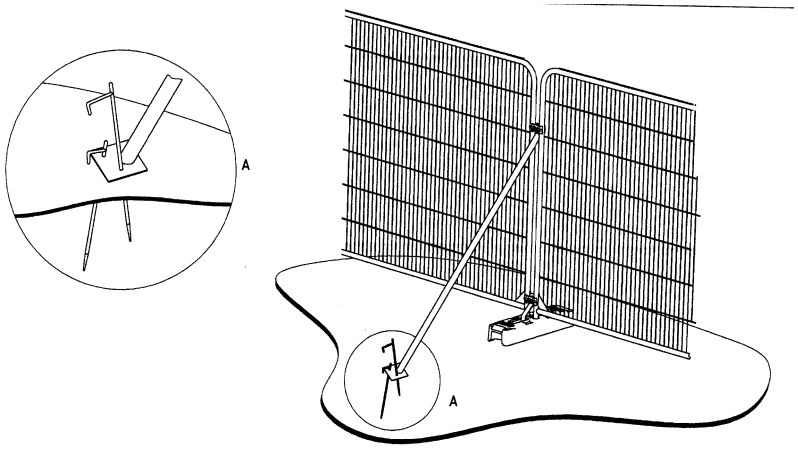

9.2.3 The entire work area (excluding the foundation position) will be covered in high density polyethylene road panels which are connected together with corner clamps to prevent slippage (Figure 8).

Figure 8 High Density Polyethylene Road Panels



© Tree Maintenance Limited 2023. Tel. 01285 760466. Email: sales@treemaintenance.co.uk

9.2.4 Where scaffold for construction is required this will be installed on top of the ground protection (Figure 9).

Figure 9. Scaffolding within the Root Protection Area.

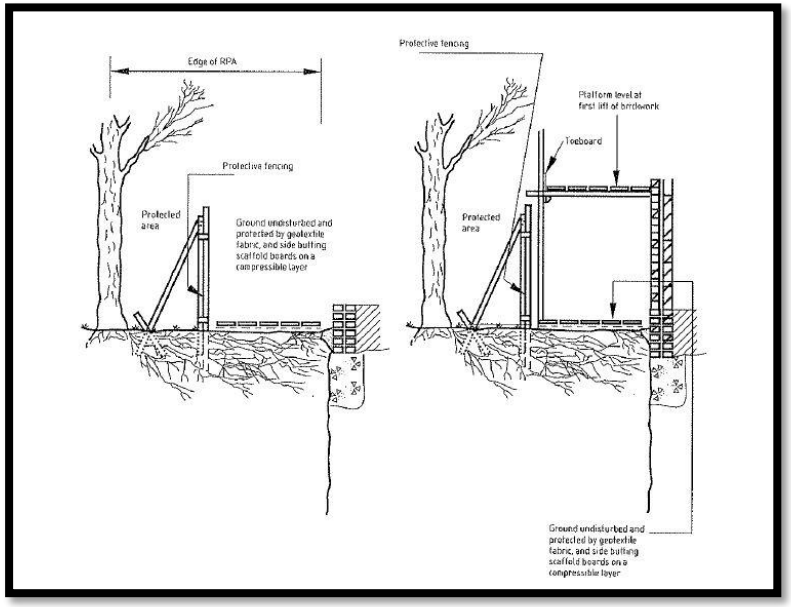

9.2.5 Once fencing is installed, all-weather notices shall be fixed to the inside faces of the barriers reading “Tree Protection Area – No Access.” (Appendix 3).

9.2.4 Once in place, the fences and ground protection shall be regarded as sacrosanct and shall not be moved (even on a temporary basis) without the prior consent of the retained Arboricultural Consultant and Wilshire Council.

9.2.5 There shall be no storage of materials/spoil or access by machinery within the unprotected areas beyond the protective fencing.

9.2.6 There shall be no underground service trenching, other excavation or use of machinery including rotavators, etc within the root protection area of the retained tree.

9.2.7 No notice boards, cables, nails or other items shall be attached to any part of any retained tree.

© Tree Maintenance Limited 2023. Tel. 01285 760466. Email: sales@treemaintenance.co.uk

9.2.8 Site operations such as deliveries, site machines, crane jibs etc shall be organised to avoid damaging the trunk or crown of retained trees. A banksman shall be employed if machinery is passing or working close to retained trees. If conflict is unavoidable then facilitation pruning shall be carried out in advance, rather than after damage has occurred.

9.2.9 Material which could contaminate the soil e.g. concrete mixing, fuel, vehicle washings etc shall not be discharged within 10.0m of the stem of any retained tree, and not on ground which slopes down to any retained tree.

9.2.10 Fires shall either not be permitted, or else not lit where flames could extend to within 5.0m of the foliage, branches or trunk of any retained tree.

9.2.11 The fence shall remain in place until the development is completed and all site machinery and materials taken off site.

9.3 Site Monitoring and Supervision

9.3.1 Following the pre-commencement meeting and the installation of tree protection measures, and given the small scale of the project, no additional site monitoring visits should be required.

9.3.2 A site logbook for tree protection measures is to be kept by the contractor to record all stages of the development - from the erection of the protective fencing right through to the completion of the project. This will be made available to the Arboricultural Consultant and Wilshire Council, if required, to show evidence of continuous site monitoring.

9.3.3 The Wilshire Council Tree Officer (or appropriate representative) will have agreed access to the site and will report on any problem areas directly to the owner's preferred Arboricultural Consultant, who will then visit the site and make recommendations to the developer on how best to rectify the situation and ensure the implementation.

9.4 Completion Meeting

9.4.1 Upon completion of all the works specified above, and in line with procedures specified, the retained Arboricultural Consultant will invite Wilshire Council's Tree Officer to meet on site, to discuss the project and to agree on any remedial works required.

10.0 LIMITATIONS

10.1 This report has been compiled as a preliminary assessment of the current health and condition of trees within and immediately adjacent to the site. It provides guidance on their suitability for retention when considering future development. This is an initial survey and no detailed tree inspection or invasive investigation to confirm suspected defects has been carried out. Where this is considered necessary, it will be highlighted in recommendations.

© Tree Maintenance Limited 2023. Tel. 01285 760466. Email: sales@treemaintenance.co.uk

10.2 It is a data collection exercise from which broad constraints are established.

10.3 Due to the changing nature of trees – and possibly other site circumstances – the dimensions given within this report are limited to a two year period after which time a resurvey of trees will be required. Observations relating to health and condition of the tree are valid on the day of the survey and could possibly change between the survey and submission of a Planning Application. The project arborist must be notified by client if any significant changes are to have occurred.

10.4 Trees are dynamic structures that can never be guaranteed 100% safe; even those in good condition can suffer occasional damage under only average weather conditions. A lack of recommended work does not imply that a tree will never suffer damage. This report could be invalidated if any alterations are made to the site that could change the conditions as seen at time of inspection.

10.5 Under certain circumstances, roots can affect existing foundations, drains and other underground services. These issues are beyond the scope of instruction and have not been addressed by this report. Whilst comments relating to built structures and soil data appear any opinion expressed is qualified as that of a competent arboriculturalist and should be confirmed by an appropriately qualified professional.

10.6 All rights in this report are reserved. No part of it may be reproduced or transmitted, in any form or by any means, electronic, mechanical, photocopying, recording or otherwise, or stored in any retrieval system of any nature, without written permission from Tree Maintenance Limited. Its content and format are for the exclusive use of the addressee in dealing with this site. It may not be sold, lent, hired out or divulged to any third party not directly involved in this site without the written consent of Tree Maintenance Limited.

Signed:



Ken Sheppard, MICFor, FArborA, Dip Arb (RFS), Tech Cert (ArborA), CUEW.

Senior Arboricultural Consultant

DATE: Monday 30 May 2023

11.0 REFERENCES

British Standard 5837:2012 *Trees in relation to demolition design and construction - Recommendations*
British Standard 3998:2010 '*Recommendations for Tree Work*'
Diagnosis of ill-health in trees. Strouts & Winter. DOE/HMSO. 1994.
Principles of Tree Hazard Assessment and Management. Lonsdale. DETR/HMSO. 1999.
Tree Roots in the Built Environment. Robert, Jackson & Smith. HMSO 2006
The Body Language of trees. Mattheck & Breloer. DOE/HMSO. 1994.
Updated Field Guide for Visual Tree Assessment. C. Mattheck. Karlsruhe Research Centre. 2007

© Tree Maintenance Limited 2023. Tel. 01285 760466. Email: sales@treemaintenance.co.uk

APPENDIX 1. METHOD AND DEFINITIONS

A.1 Trees have been surveyed using the Visual Tree Assessment method expounded by Mattheck and Breloer (The body language of trees, DoE Booklet Research into Amenity Trees No. 4, 1994 and Mattheck, Updated Field Guide for Visual tree Assessment 2007). It is a preliminary assessment from ground level using binoculars to inspect crown features where necessary. Suspected defects have been subject to cursory ground level investigation using a light steel probe and/or soft faced mallet. Where considered necessary, further investigations may be recommended within the Survey Schedule.

A.2 **Tree No.** Trees are identified with sequentially numbered metal tags. Where possible these are installed at 1.5-2 metres on the north side of the trunk. Numbers are recorded within the Survey Schedule and shown on Tree Survey and Protection Plan 15821/70075 included at Appendix 2. Groups, woodlands and hedges are not numbered on site but are marked on the plan. Trees are marked (Y) yes or (N) no on the tree number column on the survey schedule to indicate if they were tagged or not, as access allowed.

A.3 **Species.** Both common and botanical names are given. Botanical names are *italicised. sp.* after the genus name indicates that genus only has been identified. For groups, hedges and woodlands the first five most common species are listed with common name only together with the estimated number of each of the main species. There may be other less frequent species included in the group which are not listed but will be reflected in the number of trees within a group.

A.4 (Yes), (No) or (TBC (to be confirmed)) beneath the name indicates if the tree or group are at the time of survey known to be protected by a Tree Preservation Order (TPO) or located within a Conservation Area. Private Covenants and land charges have not been investigated.

A.5 **Age Class.** This is a best predicted assessment considering the tree species together with its environment.

NP	**New Planting**	Recently planted young trees capable of easy relocation.
Y	**Young**	Newly established trees of less than ¼ life expectancy .
SM	**Semi mature**	Established trees between ¼ but less than ⅓ predicted life expectancy.
MA	**Middle Aged**	Trees within ⅓ and ⅔ predicted life expectancy.
M	**Mature**	Trees over ⅔ predicted life expectancy with limited potential for future growth
OM	**Over mature**	Towards end of normal life expectancy and showing some signs of decline.
V	**Veteran**	Over mature trees which have significant cultural, landscape or biological interest

A.6 **Number of Trunks.** Identifies the number of vertical trunks assessed and recorded. Up to 10 individual trunks are recorded followed by ranges 10-20 or more than 20.

A.7 **Measurements.** (E) Indicates that measurements are estimated, (M) indicates diameters are measured. Where trees are located offsite or in inaccessible locations within the site, all measurements will be estimated, and a 'best available' assessment made. Trees shown using estimated data will be marked as para. 3.5

© Tree Maintenance Limited 2023. Tel. 01285 760466. Email: sales@treemaintenance.co.uk

Trunk Diameters. Measured using a metric diameter tape which provides an average stem diameter in millimetres. Trees are measured at 1.5 metres above ground level including those with more than one trunk (up to 5 stems are recorded). Where trees have more than 5 stems all stems are measured but only the mean average stem diameter and numbers of stems are recorded. (BS 5837: 2012 Section 4.6). On sloping ground all measurements are taken on the uphill side of the trunk but below bulges and flares where these would significantly distort the measurements. Measurements are rounded up to the nearest 10mm. Trees within a group are awarded a single trunk measurement of the largest tree measured within the group.

Tree Height. Measured with an optical measuring device to ensure consistency where a clear view can be made otherwise heights are estimated to the nearest metre.

Crown Spread. Measured and rounded up to the nearest metre. For individual trees these are recorded in the four compass point directions from the centre of the trunk. Groups are recorded to the maximum canopy extent in each of the four compass point directions.

Height and Direction of First Branch. Estimated in metres from ground level and expressed in the main four compass point directions.

Height of Crown above Ground Level. This is estimated in metres to the lowest point in the four cardinal compass point directions. Trees with extensive basal growth or drooping crowns may be recorded as a zero height.

A.8 **Physiological Condition**. An assessment of the tree's overall health (ability to resists strain) which affects its ability to tolerate changes such as, climate, local environment and colonisation by pests and diseases. The assessment is based on bud density and distribution, leaf size and colour, crown density, annual extension and wound closure compared with similar species within the locality.

G	**Good**	A tree with a fully functioning biological system showing evidence of strong sustained growth.
F	**Fair**	A tree with fully functioning biological system showing evidence of continuing growth which has the potential to improve or decline depending on environmental conditions and future management.
P	**Poor**	A tree with a biological system of limited functionality and declining health, unlikely to recover but which may remain in a moribund state for a significant period of time.
D	**Dead**	A tree which lacks any significant live tissue or functioning biological systems.

© Tree Maintenance Limited 2023. Tel. 01285 760466. Email: sales@treemaintenance.co.uk

A.9 **Structural Condition**. This relates to the physical condition of a tree including its roots, trunk, branch unions and limbs. It is an overall assessment of bio mechanical strength based on visible defects or defect indicators identified at the time of the survey.

G	**Good**	No significant structural defects.
F	**Fair**	Structural defects which can be improved or removed through moderate remedial tree surgery or other management practices.
P	**Poor**	Significant structural defects which cannot be alleviated through moderate tree surgery or other management practices.

A.10 **Observations and Comments**. Provides specific descriptive and analytical comments on the tree and its environment. These are likely to be of assistance at later stages of the design process in determining suitability of trees for retention, tree protection requirements and necessary management works. It will identify major observable defects and signs of ill health.

A.11 **Useful Life Expectancy.** A best assessment given the tree's environment, health and structural condition at the time of the survey. This estimate does not take into account the possible effects of future development on the trees' health and longevity. The trees are assessed as being within the broad bands of <10, 10-20, 20-40 or 40+ years.

© Tree Maintenance Limited 2023. Tel. 01285 760466. Email: sales@treemaintenance.co.uk

A.12 **BS Category.** Based on the above information trees are classified into one of the following categories as defined in section 4.5 and Table 1 of BS 5837:2012. Trees may be given one or more sub categories however this does not increase the value of the tree but indicates identifiable attributes. Where trees cannot be fully assessed due to access they will be awarded they highest possible grade they could reasonably achieve but may be reviewed following access being obtained and trees being re-surveyed at a later date.

Category and identification Colour on plan	**1. Mainly arboricultural values**	**2. Mainly landscape values**	**3. Mainly cultural values**
U (red)			
Trees of such a condition that they cannot be realistically retained as living trees in the context of the current land use for longer than 10 years	• Trees that have serious, irremediable, structural defect, such that their early loss is expected due to collapse including those which will become unviable after the removal of other category U trees (where for whatever reason, the loss of companion shelter cannot be mitigated by pruning) • Trees that are dead or are showing signs of significant, immediate, and irreversible overall decline. • Trees infected with pathogens of significance to health and/or safety of other trees nearby, or very low quality trees suppressing adjacent trees of better quality. *Note Category U trees can have existing or potential conservation value which might be desirable to preserve*		
A (green)			
Trees of high quality with an estimated life expectancy of at least 40 years	Trees that are a particularly good example of their species, especially if rare or unusual, essential components of groups or of formal or semi-formal features (e.g. the dominant or principal trees within an avenue)	Trees, groups or woodlands of particular visual importance as arboricultural or landscape features	Trees, groups of trees or woodlands of significant conservation, historical or other value (e.g. veteran or wood pasture
B (blue)			
Trees of moderate quality with a remaining life expectancy of at least 20 Years	Trees which may be in the A category but are downgraded due to their impaired condition (e.g. presence of significant though remediable defects, including unsympathetic past management and storm damage), such they are unlikely to be suitable for retention for beyond 40 years; trees lacking the special quality necessary to merit category A designation	Trees that are in numbers, usually growing as groups or woodlands, such that they attract a higher collective rating than they might as individuals; or trees occurring as collectives but situated so as to make little visual contribution to the wider locality.	Trees with material identifiable conservation or other cultural benefits
C (grey)			
Trees of low quality with an estimated life expectancy of at least 10 years, or young trees with a stem diameter below 150mm	Unremarkable trees of very limited merit or such impaired condition that they do not qualify in higher categories	Trees present in groups or woodlands, but without this conferring on them any greater collective landscape value ; and/or trees offering low or only temporary /transient landscape benefits	Trees with no material conservation or other cultural value

© Tree Maintenance Limited 2023. Tel. 01285 760466. Email: sales@treemaintenance.co.uk

A.13 **Recommendations**. Are those required for reasons of health and safety which a prudent owner may wish to carry out. If necessary further investigation works may be recommended to ascertain the extent and implications of suspected major defects. Works necessary to facilitate development have not been included as part of this exercise but will form part of a comprehensive schedule of works included within the draft arboricultural implications assessment and final arboricultural method statement (if required). Specified works should be completed within the designated time frame to ensure compliance with owner/occupiers' general duty of care. All works should be completed in accordance with British Standard 3998 Tree work – recommendations 2010 by a suitably competent, qualified and insured arboricultural contractor.

A.14 **Priority.** For specified works and are the reasonable recommended time frames in which work should be reasonably completed in order to comply with the general duty of care or obtain further data to guide the design process.

Months	Priority	Definition
1-3	Urgent	Indicates works that are and relate to imminently dangerous trees or tree parts and should be completed without delay.
3, 6, 12	Works required	A guide in which non urgent but necessary works should be completed. Most re-inspection works should be completed within 1-3 months in order to guide the design process.
ABA	As Budget Allows	Non urgent works, mainly for cultural future management.
N/A	Not Applicable	No works specified at the time of survey.

© Tree Maintenance Limited 2023. Tel. 01285 760466. Email: sales@treemaintenance.co.uk

APPENDIX 2. TREE SURVEY AND PROTECTION PLAN 15821/70075

© Tree Maintenance Limited 2023. Tel. 01285 760466. Email: sales@treemaintenance.co.uk

Tree Maintenance Ltd
Unit 60 Aston Down,
Stroud, Gloucestershire.
GL6 8GA
Tel: 01285 760466
Email: sales@treemaintenance.co.uk

Brookhill House, Sherton, Malmesbury
Tree Survey and Protection Plan

SCALE : 1 : 200 @ A3
DATE : 30/05/2023
MAP FILENAME 5821/70075

N

Based on Plans as exisiting /proposed 2202/1 and Survey data gathered 27th May 2023
This plan must be read and reproduced in colour.

Legend

Crown Spread
Root Protection Area
Category 'A'
Category 'B'
Category 'C'
Category 'U'

0 15m

Ground Protection
Supporting Radial Wall
Suspended Concrete Slab (with void below)
Construction Storage and Parking Area
Protective Fencing

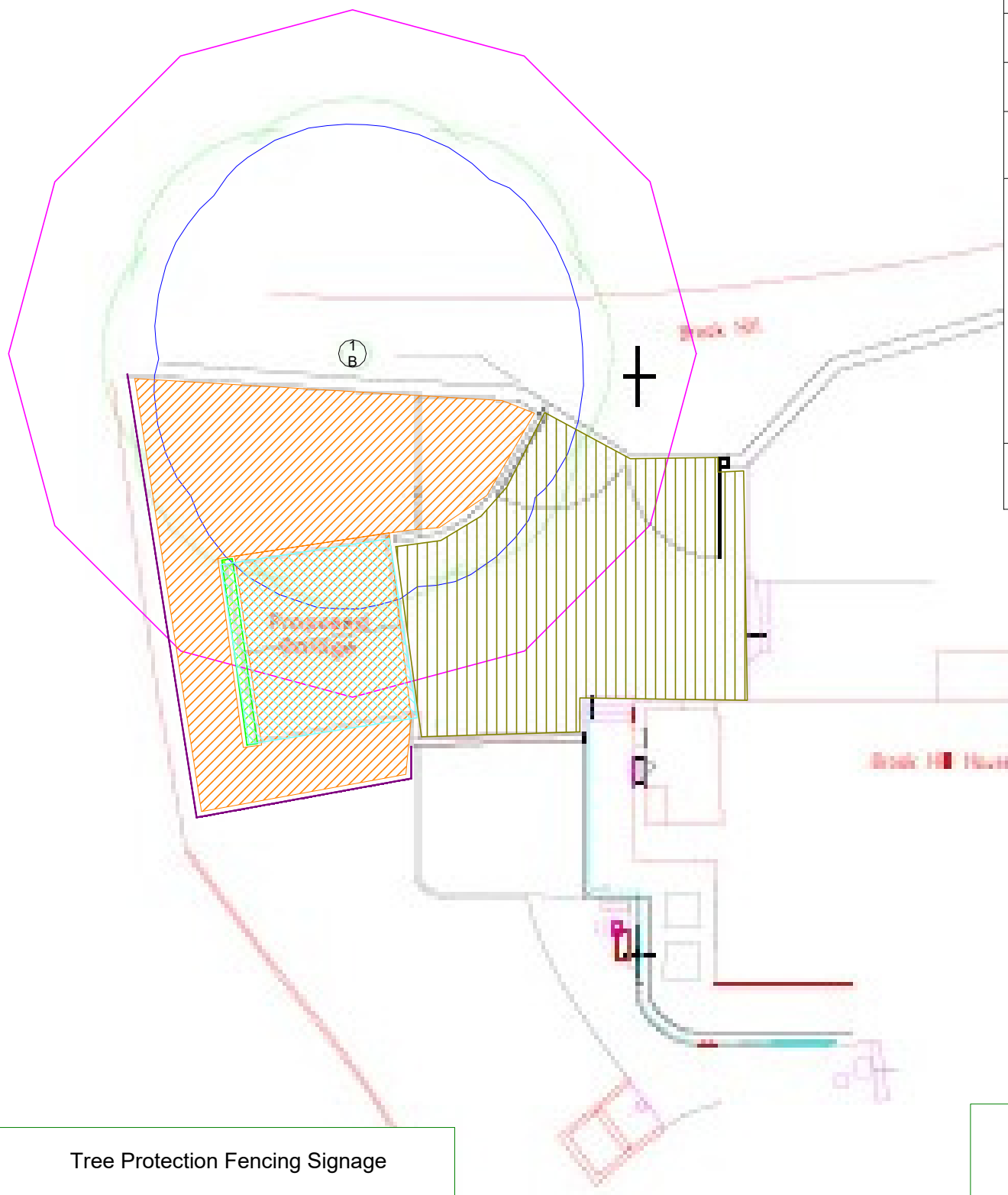

Tree Protection Fencing Signage



Protective Fencing.
Low Intensity Construction Activity
(Soft Ground)

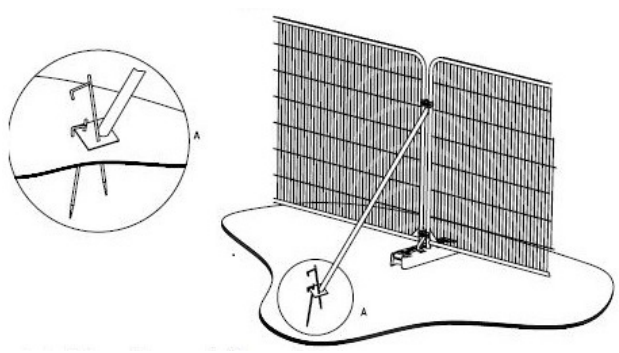

High Density Polyethylene Road Panels
Heavy Duty Ground Protection





Protective Fencing and Pedestrian Acess within RPA.

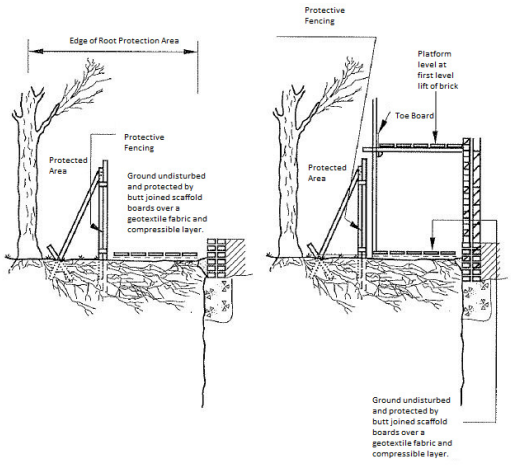

APPENDIX 3. TREE PROTECTION FENCING SIGNAGE

SITE: Brook Hill House, Brook Hill, Sherston, Wiltshire, SN16 0NQ TM Reference: 15821/70075

Do not remove or alter fencing or enter protected area without arboricultural advice and supervision.

Arboricultural Consultants: Tree Maintenance Limited. 01285 760466. email: sales@treemaintenance.co.uk



PROTECTIVE FENCING.
THIS FENCING MUST BE MAINTAINED IN ACCORDANCE WITH THE APPROVED PLANS AND DRAWINGS FOR THIS DEVELOPMENT.



TREE PROTECTION AREA
KEEP OUT

(TOWN AND COUNTRY PLANNING ACT 1990)
TREES ENCLOSED BY THIS PROTECTIVE FENCING ARE PROTECTED BY PLANNING CONDITIONS AND/OR ARE THE SUBJECT OF A TREE PRESERVATION ORDER. CONTRAVENTION OF A TREE PRESERVATION ORDER MAY LEAD TO CRIMINAL PROSECUTION.

ANY ALTERATION TO THE FENCING OR INCURSION INTO MUST BE WITH THE WRITTEN PERMISSION OF WILTSHIRE COUNCIL.