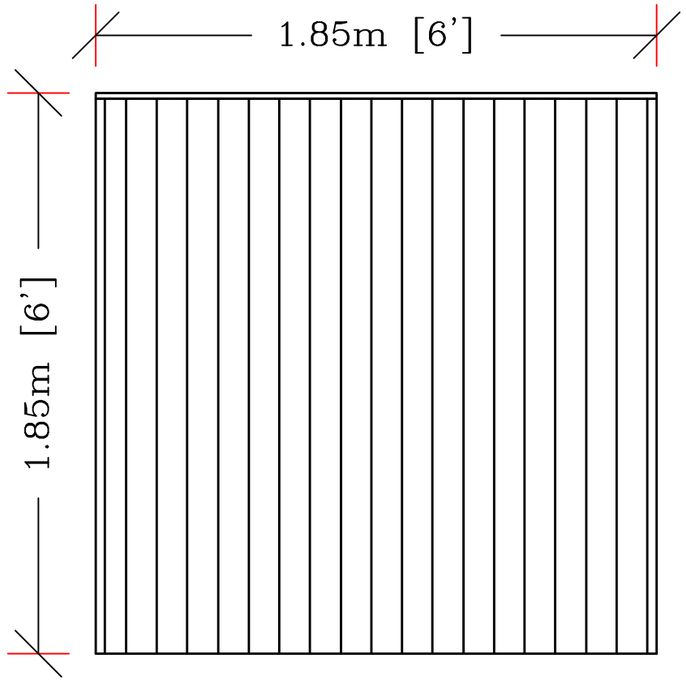

FENCE PANEL ELEVATION

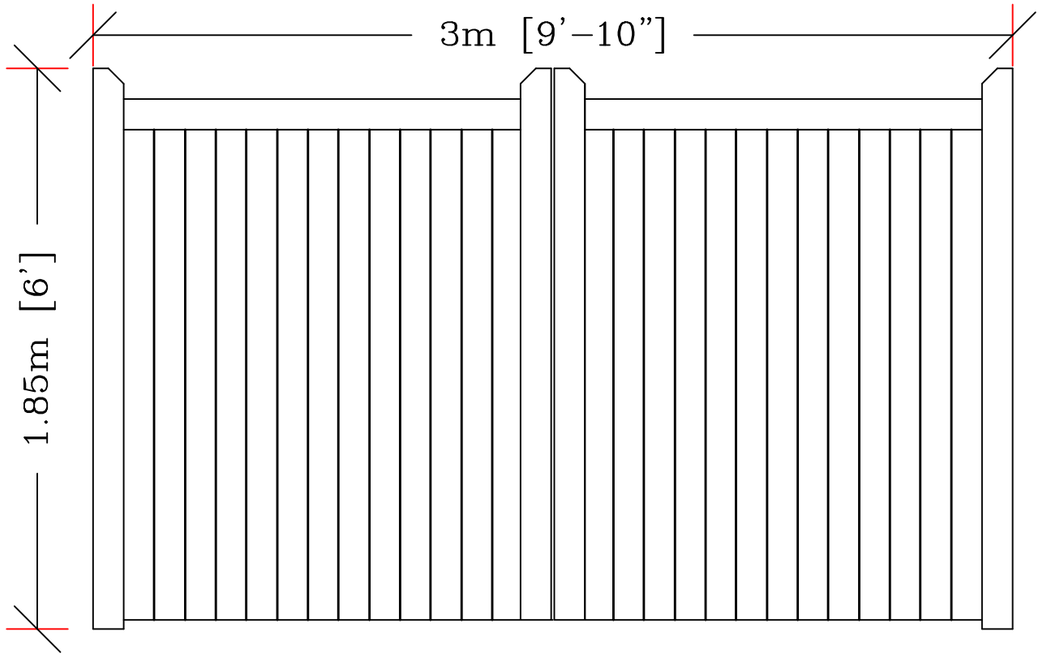

GATES ELEVATION



NOTES :-
These drawings are solely for the purpose of seeking planning and building regulation approvals, they are not a specification of work and DAK draughting Ltd accepts no liability should they be used for any other purpose

All drawings are to be read in conjunction with specialist design elements and structural engineers notes. Any works carried out prior to approval is done at the clients / builders risk

The contractor is responsible for checking all scaled and stated dimensions prior to any activity commencing or orders being placed

Any boundaries shown on the plans are assumed location and the client / contractor must check the precise location of any boundaries prior to commencement and ensure work does not take place across boundaries or outside of any given approval

The client is responsible for ensuring all required approvals have been granted and all matters relating to Party walls have been resolved in accordance with the Party Wall act 1996 prior to commencing building works

All drainage layouts shown on the plans are indicative only

DAK Draughting Ltd will not be liable for the accuracy of any hidden details such as wall construction, lintels, existing beams, foundations, drainage etc. It is the responsibility of the client and the contractor to expose all hidden features prior to commencement of any building works

This drawing is the copyright of DAK Draughting Ltd and must not be copied, reproduced or replicated in any way without prior consent

DAK Draughting
tele :- 01590 615139

CLIENT MR.P.SOCHON
SITE BARRINGTON HOUSE
CHURCHFIELDS ROAD, SALISBURY
SP2 7NL

DRAWING

PROPOSED FENCE PANEL & GATES ELEVATIONS

DRAWING No. DAK / CR / 13
SCALE 1 : 20 @ A3 (printed to scale)
DATE :- 09 / 06 / 2023 DRAWN BY:- DAK