0 1:10 0.1 0.2 0.3 | 0 1:20 0.5 | 0 1:50 1 2 | 0 1:100 1 2 3 4 5 | 0 1:200 1 2 3 4 5 | 0 1:500 5 10 20 | 0 1:1250 10 20 30 40 50 | 0 1:2500 10 20

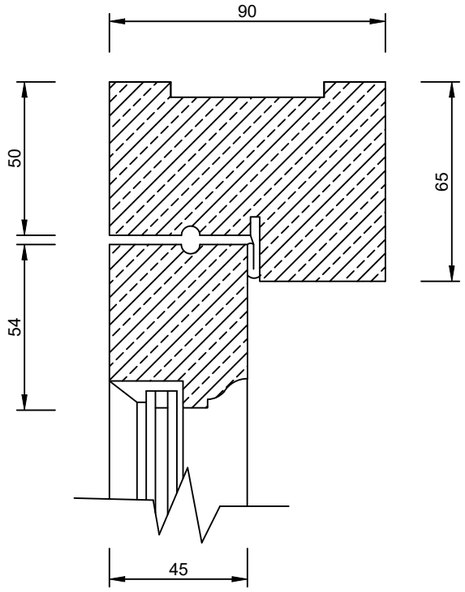

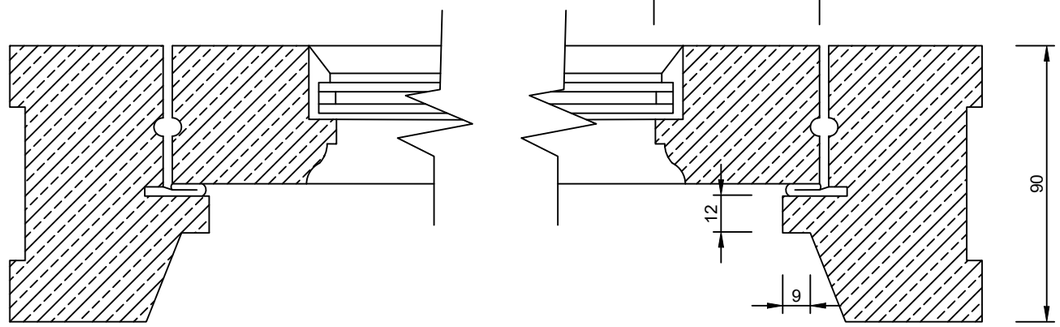

Window Section
1:2@A3

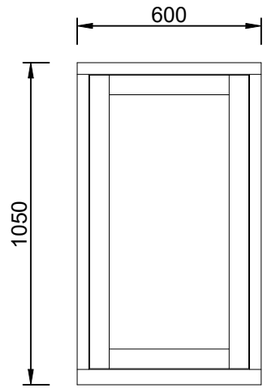

WG-01

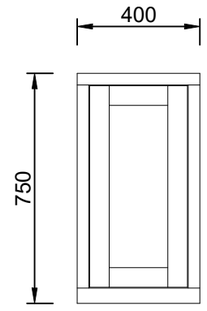

WG-02 & WF-01

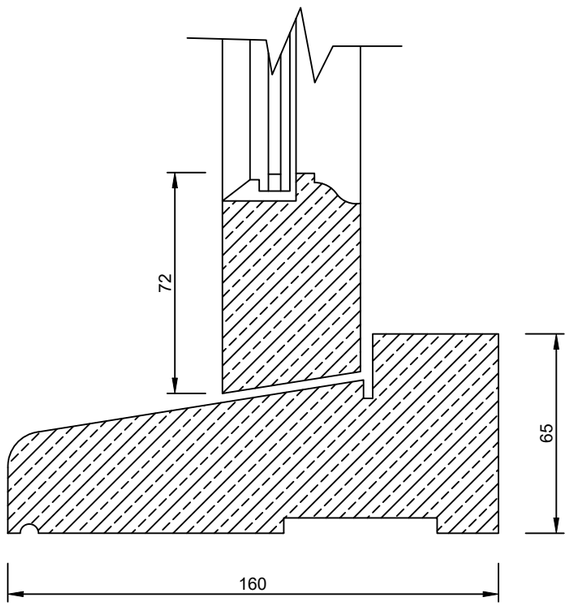

Window Section
1:2@A3

Internal Window Elevations
1:20@A3





Doors
Internal Doors (above left) DG-01 and DG02 to be Venables Oak Ledged and Braced Doors (https://www.venablesoak.co.uk/ledged-and-braced-doors)

External Door (above right) ED-01 to be Liberty Doors Oak Unfinished Rustic Grange Ledged Solid Stable Door

THIS DRAWING IS COPYRIGHT
© Rock Architectural Design Ltd 2023

REPRODUCING THESE DRAWINGS BY PRINTING OR COPYING MAY LEAD TO ERRORS, PLEASE REFER TO SCALE BAR. DO NOT SCALE OFF THESE DRAWINGS FOR CONSTRUCTION PURPOSES. IF ANY DISCREPANCIES ARE FOUND, PLEASE CONTACT ROCK ARCHITECTURAL DESIGN IMMEDIATELY.

DESIGNERS RISK ASSESSMENT- HEALTH AND SAFETY
THE CONSTRUCTION (DESIGN AND MANAGEMENT) REGULATIONS 2015

Where appropriate, for significant hazards specific to the project please refer to drawing CDM01

REV.	DETAILS	BY	CKD	DATE
-	-	-	-	-

ROCK
architectural design ltd.
PETER ROBINSON RIBA
Hunts Cottage, Hindon Road, Dinton, SP3 5EQ
email:robinsonpe@hotmail.co.uk tel: 01722 717500

CLIENT
Mr S Harris

PROJECT
41 Upper Woodford, Salisbury

DRAWING TITLE
Proposed House
Window and Door Schedule

DATE	DRAWN BY	CHECKED BY
24/04/23	PR	-

SCALE	JOB NO.
Varies@A3	2301

DRAWING NO.	REVISION
P10	-

PLANNING