0 0.1 0.2 0.3 0 0.5 0 1 2 0 1 2 3 4 5 0 1 2 3 4 5 0 5 10 20 0 10 20 30 40 50 0 10 20

1:10 1:20 1:50 1:100 1:200 1:500 1:1250 1:2500

NORTH

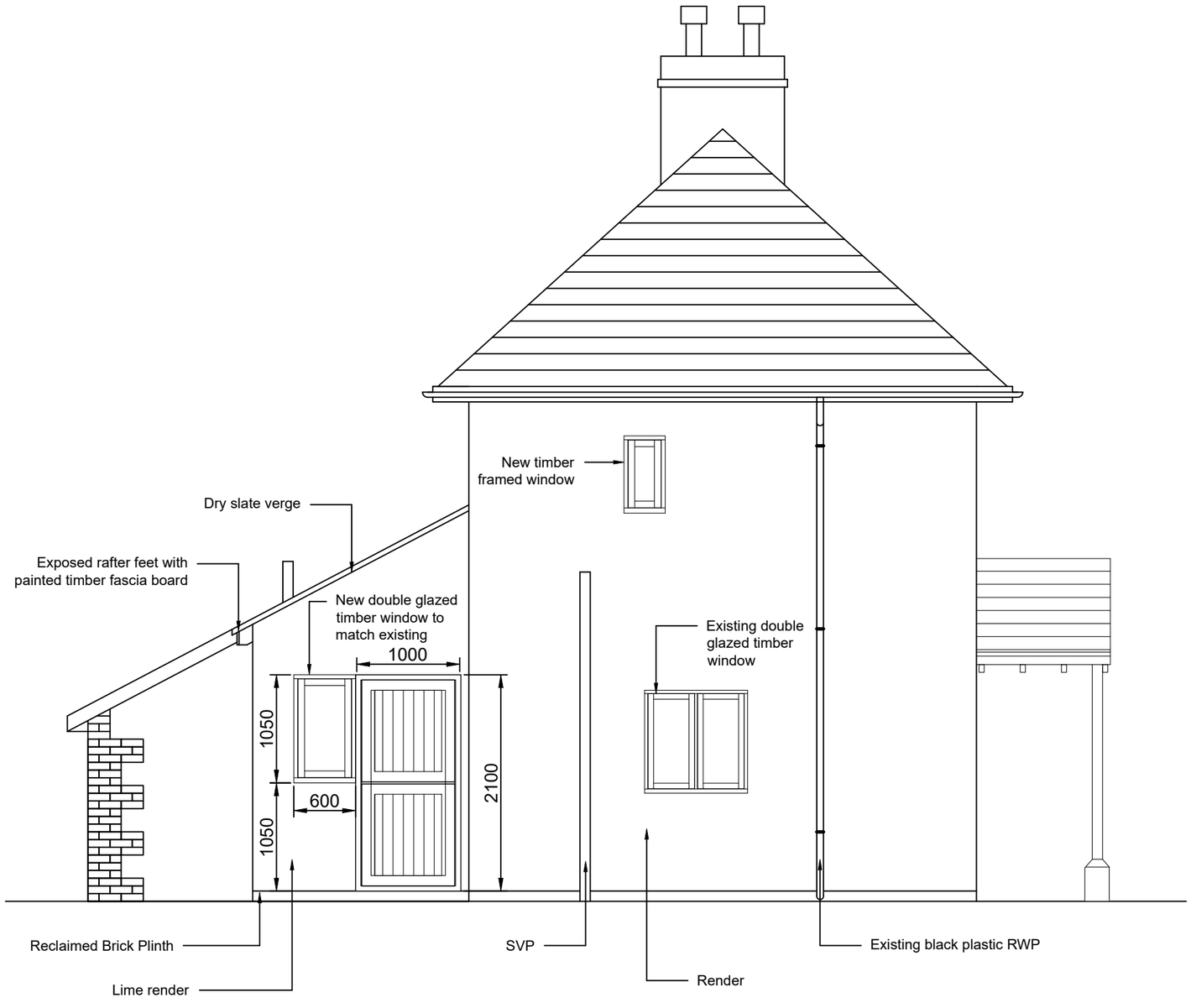

Side Elevation
1:50@A3

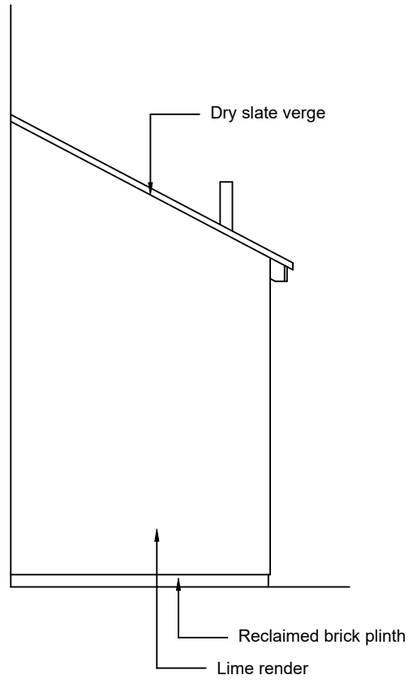

Side Elevation
1:50@A3

THIS DRAWING IS COPYRIGHT
© Rock Architectural Design Ltd 2023

REPRODUCING THESE DRAWINGS BY PRINTING OR COPYING MAY LEAD TO ERRORS, PLEASE REFER TO SCALE BAR. DO NOT SCALE OFF THESE DRAWINGS FOR CONSTRUCTION PURPOSES. IF ANY DISCREPANCIES ARE FOUND, PLEASE CONTACT ROCK ARCHITECTURAL DESIGN IMMEDIATELY.

DESIGNERS RISK ASSESSMENT- HEALTH AND SAFETY THE CONSTRUCTION (DESIGN AND MANAGEMENT) REGULATIONS 2015

Where appropriate, for significant hazards specific to the project please refer to drawing CDM01

REV.	DETAILS	BY	CKD	DATE
-	-	-	-	-

ROCK
architectural design ltd.
PETER ROBINSON RIBA
Hunts Cottage, Hindon Road, Dinton, SP3 5EQ
email:robinsonpe@hotmail.co.uk tel: 01722 717500

CLIENT
Mr S Harris

PROJECT
41 Upper Woodford, Salisbury

DRAWING TITLE
Proposed House
Side Elevations

DATE	DRAWN BY	CHECKED BY
10/04/23	PR	-

SCALE	JOB NO.
1:50@A3	2301

DRAWING NO.	REVISION
P08	-

PLANNING