

EXISTING FRONT ELEVATION

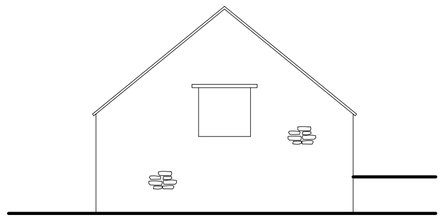

EXISTING SIDE ELEVATION

0 2 4 6 8 10

ELEVATIONS SCALE 1:100

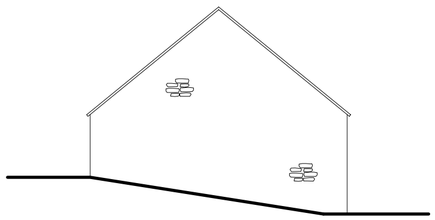

EXISTING SIDE ELEVATION

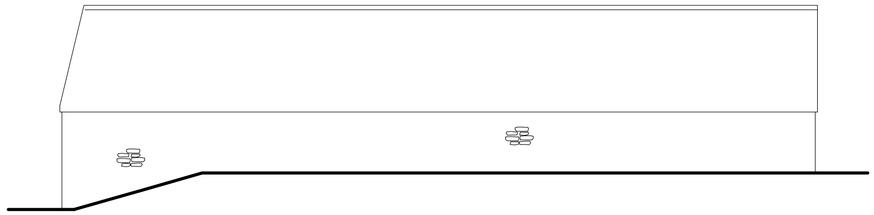

EXISTING REAR ELEVATION

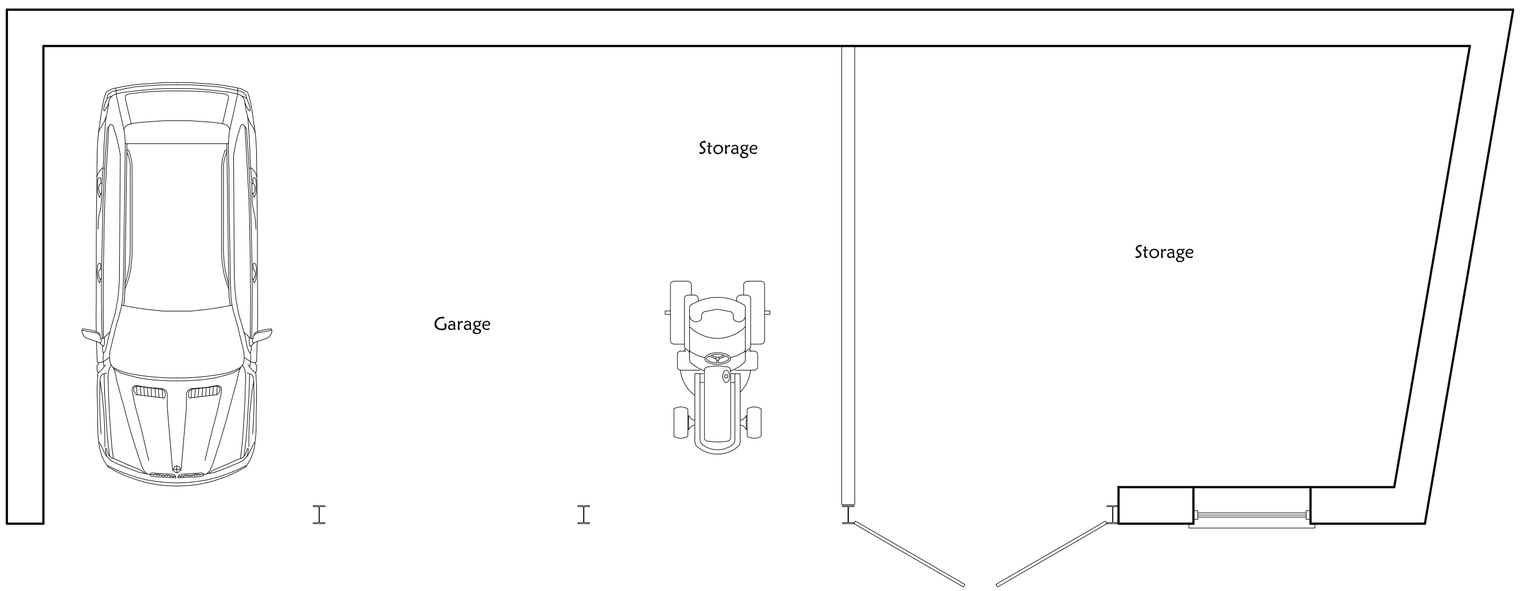

0 1 2 3 4 5

FLOOR PLANS SCALE 1:50

EXISTING GROUND FLOOR PLAN

Project:

CUFFS COTTAGE BARN
EAST HATCH

Drawing Title:

EXISTING FLOOR PLANS
AND ELEVATIONS

Client:

MR JULIAN STERN

Singleton Design

32 Castle Street, Newtown
Tisbury, Wiltshire, SP3 6SN

Tel. 01747 445045
e: singleton.design@btinternet.com

Scale: 1:50, 1:100 @ A2

Drg No: P705/03 Rev: